4.4 EXALIGN™ Self-Aligning Bearing Housing

DF Flanged Bearing Housing - 2 Bolts

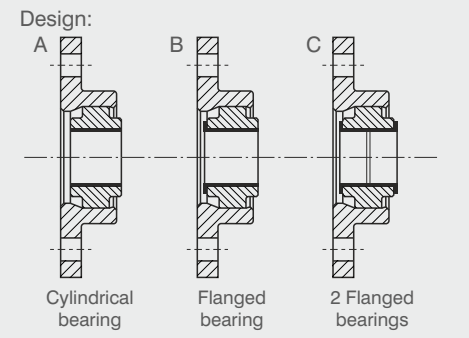

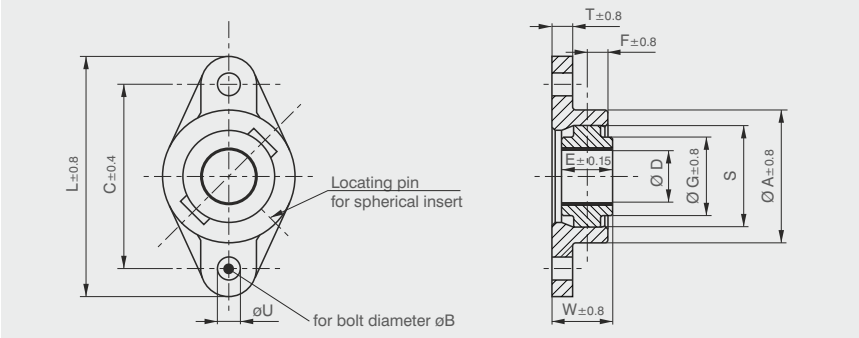

Housing material: GG 20
Spherical insert material: GG 20
Stainless and corrosion-resistant versions are available on request.

Ordering Example:

Flanged housing — **DF1-10M-B-DU**

Size — Standard bush Ø D — Design (see sketch above)

DF1	**M** Metric	**A** Cylindrical bearing	
DF2	**E** Inch	**B** Flanged bearing	
DF3		**C** 2 Flanged bearings	
DF4			
DF5			
DF6			
DF7			
DF8			
DF9			
DF10			

Bush product for dry applications	with design	Bush product for greased applications	with design
DP4®	**A, B or C**	**DX®**	**A**
DP4-B	**A, B or C**	**DX®10**	**A**
DU®	**A, B or C**	**HI-EX™**	**A**
DU-B	**A, B or C**	**DS**	**A**
DP10	**A, B or C**	**SY**	**A**
DP11	**A, B or C**	**GGB-SZ**	**A**
DS	**A**		
GGB-CSM®	**A**		
GGB-CBM®	**A**		
GAR-MAX®	**A** (D>28mm)		
GAR-FIL	**A** (D>28mm)		
HPM	**A** (D>28mm)		
HPF	**A** (D>28mm)		
HSG	**A** (D>28mm)		
HPMB®	**A** (D>28mm)		

Order-No.	Dimensions [mm] EXALIGN™ DF Flanged Bearing Housing												
GGB	D*	Insert bore H7	øU	øB	E	C	L	T	W	A	F	G	S
DF1-10M	10	12	9.5	8	15	81	103	8	23	54	6	33.3	41.2
DF1-12M	12	14	9.5	8	15	81	103	8	23	54	6	33.3	41.2
DF1-13M	13	15	9.5	8	15	81	103	8	23	54	6	33.3	41.2
DF1-14M	14	16	9.5	8	15	81	103	8	23	54	6	33.3	41.2
DF1-15M	15	17	9.5	8	15	81	103	8	23	54	6	33.3	41.2
DF1-16M	16	18	9.5	8	15	81	103	8	23	54	6	33.3	41.2
DF1-17M	17	19	9.5	8	15	81	103	8	23	54	6	33.3	41.2
DF1-18M	18	20	9.5	8	15	81	103	8	23	54	6	33.3	41.2
DF2-20M	20	23	11.1	10	20	89	116	10	27	64	10	39.7	50.7
DF2-22M	22	25	11.1	10	20	89	116	10	27	64	10	39.7	50.7
DF2-24M	24	27	11.1	10	20	89	116	10	27	64	10	39.7	50.7
DF2-25M	25	28	11.1	10	25	89	116	10	30	64	10	39.7	50.7
DF2-28M	28	32	14.3	12	30	113	143	11	36	79	13	51	63.4
DF3-30M	30	34	14.3	12	30	113	143	11	36	79	13	51	63.4
DF3-32M	32	36	14.3	12	30	113	143	11	36	79	13	51	63.4
DF4-35M	35	39	14.3	12	35	130	159	14	45	95	16	60.3	76.1
DF4-40M	40	44	14.3	12	40	130	159	14	45	95	16	60.3	76.1
DF5-45M	45	50	14.3	12	45	144	175	16	51	108	16	73	88.8
DF6-50M	50	55	17.5	16	50	157	190	16	58	117	21	79.3	100
DF7-55M	55	60	17.5	16	55	184	216	17	62	137	22	83	110
DF7-60M	60	65	17.5	16	60	184	216	17	65	137	22	83	110
DF7-65M	65	70	17.5	16	60	184	216	17	65	137	22	83	110
DF8-70M	70	75	17.5	16	65	202	236	19	71	143	25	89	120
DF8-75M	75	80	17.5	16	65	202	236	19	71	143	25	89	120
DF9-80M	80	85	22.2	20	80	214	259	22	28	117	129	108	139.7
DF9-85M	85	90	22.2	20	80	214	259	22	28	117	129	108	139.7
DF10-90M	90	95	22.2	20	80	279	324	25	91	210	32	130	170
DF10-95M	95	100	22.2	20	80	279	324	25	91	210	32	130	170
DF10-100M	100	105	22.2	20	80	279	324	25	91	210	32	130	170

Other dimensions are available on request.
**Dimension D is with the standard bush pressed in.*

4.5 EXALIGN™ Self-Aligning Bearing Housing

FL Flanged Bearing Housing - 4 Bolts

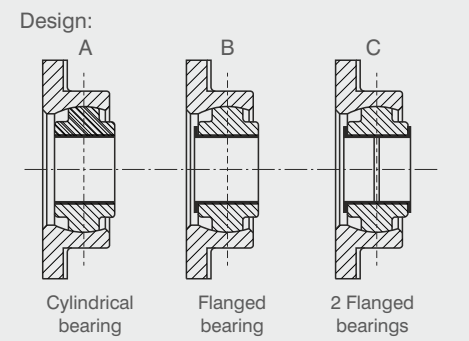

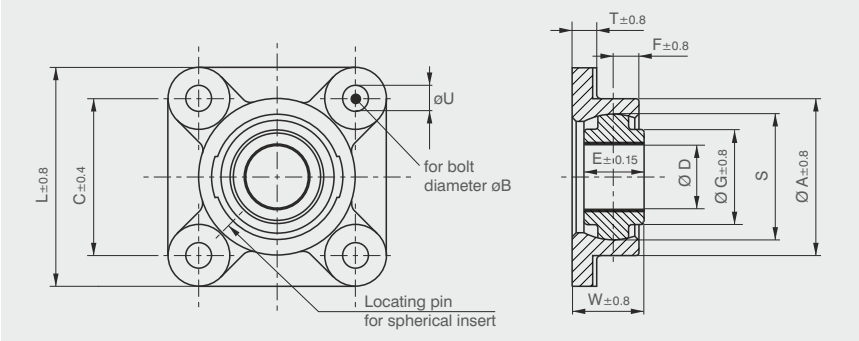

Housing material: GG 20
Spherical insert material: GG 20
Stainless and corrosion-resistant versions are available on request.

Ordering Example:

Flanged housing — **FL1-10M-B-DU**

Size: FL1 | Standard bush Ø D: 10 | M | B | DU

FL1	**M** Metric	**A** Cylindrical bearing	
FL2	**E** Inch	**B** Flanged bearing	
FL3		**C** 2 Flanged bearings	
FL4			
FL5			
FL6			
FL7			
FL8			
FL9			
FL10			

Design (see sketch above)

Bush product for dry applications	with design	Bush product for greased applications	with design
DP4®	**A, B or C**	**DX®**	**A**
DP4-B	**A, B or C**	**DX®10**	**A**
DU®	**A, B or C**	**HI-EX™**	**A**
DU-B	**A, B or C**	**DS**	**A**
DP10	**A, B or C**	**SY**	**A**
DP11	**A, B or C**	**GGB-SZ**	**A**
DS	**A**		
GGB-CSM®	**A**		
GGB-CBM®	**A**		
GAR-MAX®	**A** (D>28mm)		
GAR-FIL	**A** (D>28mm)		
HPM	**A** (D>28mm)		
HPF	**A** (D>28mm)		
HSG	**A** (D>28mm)		
HPMB®	**A** (D>28mm)		

Order-No.	Dimensions [mm] EXALIGN™ FL Flanged Bearing Housing												
GGB	D*	Insert bore H7	øU	øB	E	C	L	T	W	A	F	G	S
FL1-10M	10	12	9.5	8	15	57	76	8	23	54	6	33.3	41.2
FL1-12M	12	14	9.5	8	15	57	76	8	23	54	6	33.3	41.2
FL1-13M	13	15	9.5	8	15	57	76	8	23	54	6	33.3	41.2
FL1-14M	14	16	9.5	8	15	57	76	8	23	54	6	33.3	41.2
FL1-15M	15	17	9.5	8	15	57	76	8	23	54	6	33.3	41.2
FL1-16M	16	18	9.5	8	15	57	76	8	23	54	6	33.3	41.2
FL1-17M	17	19	9.5	8	15	57	76	8	23	54	6	33.3	41.2
FL1-18M	18	20	9.5	8	15	57	76	8	23	54	6	33.3	41.2
FL2-20M	20	23	11.1	10	20	64	89	10	27	64	10	39.7	50.7
FL2-22M	22	25	11.1	10	20	64	89	10	27	64	10	39.7	50.7
FL2-24M	24	27	11.1	10	20	64	89	10	27	64	10	39.7	50.7
FL2-25M	25	28	11.1	10	25	64	89	10	30	64	10	39.7	50.7
FL2-28M	28	32	14.3	12	30	79	110	11	36	79	13	51	63.4
FL3-30M	30	34	14.3	12	30	79	110	11	36	79	13	51	63.4
FL3-32M	32	36	14.3	12	30	79	110	11	36	79	13	51	63.4
FL4-35M	35	39	14.3	12	35	92	121	14	45	95	16	60.3	76.1
FL4-40M	40	44	14.3	12	40	92	121	14	45	95	16	60.3	76.1
FL5-45M	45	50	14.3	12	45	102	133	16	51	108	16	73	88.8
FL6-50M	50	55	17.5	16	50	111	143	16	58	117	21	79.3	100
FL7-55M	55	60	17.5	16	55	130	165	17	62	137	22	83	110
FL7-60M	60	65	17.5	16	60	130	165	17	65	137	22	83	110
FL7-65M	65	70	17.5	16	60	130	165	17	65	137	22	83	110
FL8-70M	70	75	17.5	16	65	143	175	19	71	143	25	89	120
FL8-75M	75	80	17.5	16	65	143	175	19	71	143	25	89	120
FL9-80M	80	85	22.2	20	80	152	197	22	28	117	129	108	139.7
FL9-85M	85	90	22.2	20	80	152	197	22	28	117	129	108	139.7
FL10-90M	90	95	22.2	20	80	197	241	25	91	210	32	130	170
FL10-95M	95	100	22.2	20	80	197	241	25	91	210	32	130	170
FL10-100M	100	105	22.2	20	80	197	241	25	91	210	32	130	170

Other dimensions are available on request.
**Dimension D is with the standard bush pressed in.*

5 Applications

Potential applications for GGB self-aligning bearing housings include:

- Wind energy
- Car washing machines
- Cleaning machines
- Drum systems
- Bevelling equipment
- Handling systems
- Conveyor belts (pulleys)
- Printing machines
- Heating and ventilation equipment
- Hoists
- Cranes
- Textile machinery
- Special machines
- Bakery equipment
- Marine equipment.

Notes:

Bearing Application Data Sheet

Not sure which GGB part fits your application requirements? Go to ggbpartfinder.com to complete a Bearing Application Data Sheet online, and one of our GGB bearing specialists will reach out to you with recommended options that meet your application requirements. You can also complete the form below and share it with your GGB sales person or distributor representative.

DATA FOR BEARING DESIGN CALCULATION

Application: _____

Project / No.: _____ Quantity: _____ ☐ New Design ☐ Existing Design

DIMENSIONS (mm)

Inside diameter	D_i	
Outside diameter	D_o	
Length	B	
Outer ring length	B_F	
Flange diameter	D_{fl}	
Flange thickness	B_{fl}	
Wall thickness	S_T	
Length of slide plate	L	
Width of slide plate	W	
Thickness of slide plate	S_S	

LOAD

Radial load F	static [N]	
	dynamic [N]	
Axial load F	static [N]	
	dynamic [N]	
Specific load p	radial [MPa]	
	axial [MPa]	

MOVEMENT

Rotational speed	n [1/min]	
Speed	U [m/s]	
Length of stroke	L_S [mm]	
Frequency of stroke	[1/min]	
Oscillating cycle	ϕ [°]	
Osc. frequence	N_{OSZ} [1/min]	

MATING SURFACE

Material		
Hardness	HB/HRC	
Surface finish	Ra [µm]	

FITS & TOLERANCES

Shaft	D_J	
Bearing housing	D_H	

OPERATING ENVIRONMENT

Ambient temperature	T_{amb}[°]	

- ☐ Housing with good heating transfer properties
- ☐ Light pressing or insulated housing with poor heat transfer properties
- ☐ Non metal housing with poor heat transfer properties
- ☐ Alternate operation in water and dry

LUBRICATION

- ☐ Dry
- ☐ Continuous lubrication
- ☐ Process fluid lubrication
- ☐ Initial lubrication only
- ☐ Hydrodynamic conditions

Process fluid		
Lubricant		
Dynamic viscosity	η	

SERVICE HOURS PER DAY

Continuous operation	
Intermittent operation	
Operating time	
Days per year	

SERVICE LIFE

Required service life	L_H [h]	

BEARING TYPE:

☐ Cylindrical bearing

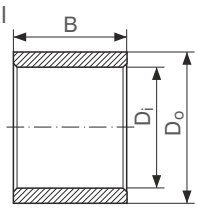

☐ Flanged bearing

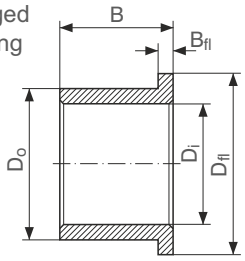

☐ Thrust washer

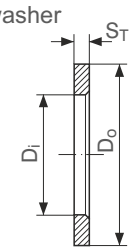

☐ Spherical bearing

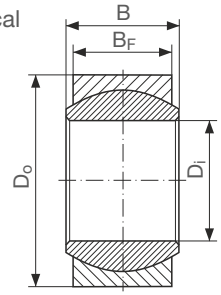

☐ Slide plate

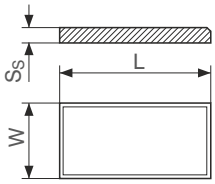

- ☐ Special parts (sketch)
- ☐ Steady load
- ☐ Rotating load
- ☐ Rotational movement
- ☐ Oscillating movement
- ☐ Linear movement

CUSTOMER INFORMATION

Company _____

Street _____

City / State / Province / Post Code _____

Telephone _____ Fax _____

Name _____

Email Address _____ Date _____

Product Information

GGB gives an assurance that the products described in this document have no manufacturing errors or material deficiencies.

The details set out in this document are registered to assist in assessing the material's suitability for the intended use. They have been developed from our own investigations as well as from generally accessible publications. They do not represent any assurance for the properties themselves.

Unless expressly declared in writing, GGB gives no warranty that the products described are suited to any particular purpose or specific operating circumstances. GGB accepts no liability for any losses, damages or costs however they may arise through direct or indirect use of these products.

GGB's sales and delivery terms and conditions, included as an integral part of quotations, stock and price lists, apply absolutely to all business conducted by GGB. Copies can be made available on request.

Products are subject to continual development. GGB retains the right to make specification amendments or improvements to the technical data without prior announcement.

Edition 2016 (This edition replaces earlier editions which hereby lose their validity).

Statement Regarding Lead Content in GGB Products & EU Directive Compliance

GGB is committed to adhering to all U.S., European and international standards and regulations with regard to lead content. We have established internal processes that monitor any changes to existing standards and regulations, and we work collaboratively with customers and distributors to ensure that all requirements are strictly followed. This includes RoHS and REACH guidelines.

GGB makes it a top priority to operate in an environmentally conscious and safe manner. We follow numerous industry best practices, and are committed to meeting or exceeding a variety of internationally recognized standards for emissions control and workplace safety.

Each of our global locations has management systems in place that adhere to ISO TS 16949, ISO 9001, ISO 14001, ISO 50001 and OHSAS 18001 quality regulations.

All of our certificates can be found here: http://www.ggbearings.com/en/company/certificates. A detailed explanation of our commitment to REACH and RoHS directives can be found at www.ggbearings.com/en/company/quality-and-environment.

GGB®, DU®, DX®, GGB-DB™, UNI, MINI and EXALIGN™ are registered trademarks or trademarks, as the case may be, of GGB and its affiliates.
©2016 GGB. All rights reserved.

GGB

an EnPro Industries company

The Global Leader in High Performance Bearing Solutions

GGB North America

700 Mid Atlantic Parkway
Thorofare, New Jersey, 08086 USA
Tel. +1-856-848-3200
• email: usa@ggbearings.com
• www.ggbearings.com

IN127ENG04-16USA