# Fiber Reinforced Composite Bearings

## High Load Self-Lubricating Bearings

The Global Leader
in High Performance Bearing Solutions

GGB

an Enpro company

# GGB

GGB's history as the global leader in plain bearing technologies dates back more than 115 years, beginning with the founding of Glacier Antifriction Metal Company in 1899. GGB introduced the industry-leading DU® bearing in 1956 and the DX® bearing in 1965. Since that time, GGB has continued to create innovative technologies and solutions that improve safety, performance and profitability in a wide range of markets. Today, our products can be found everywhere – from scientific vessels at the bottom of the ocean, to racecars speeding down the tarmac, to jumbo jets slicing through the sky, to the Curiosity Rover exploring the surface of Mars.

Throughout our history, safety, excellence and respect have formed the foundational values for the entire GGB family. They are of paramount importance as we seek to maximize personal possibility, achieve excellence and establish open, creative work environments with the highest safety standards in the industry.

- Safety: GGB's deep-rooted culture of safety places a relentless focus on creating a secure, healthy work environment for all. A core value of GGB, safety is critically essential at all levels of business in order to achieve our goal of having the safest employees in the industry.
- Excellence: A world-class organization is built by fostering excellence throughout the company in all positions and functional areas. Our world-class manufacturing plants are certified in quality and excellence in the industry according to ISO 9001, TS 16949, ISO 14001, ISO 50001 and OHSAS 18001, allowing us to access the industry's best practices while aligning our quality management system with global standards.
- Respect: We believe that respect is consistent with the growth of individuals and groups. Our teams work together with mutual respect regardless of background, nationality or function, embracing the diversity of people and learning from one another.

# Quality/Certification

Our world-class manufacturing plants in the United States, Brazil, China, Germany, France and Slovakia are certified in quality and excellence in the industry according to ISO 9001, TS 16949, ISO 14001, ISO 50001 and OHSAS 18001. This allows us to access the industry's best practices while aligning our management system with global standards. For a complete listing of our certifications, please visit our website: https://www.ggbearings.com/en/company/certificates.

# The GGB Advantage

With a global manufacturing footprint, including cutting edge R&D facilities, flexible production platforms and extensive customer support networks, GGB offers unmatched technical expertise combined with razor sharp responsiveness and customized solutions.

Our global presence and local logistics networks ensure our customers receive only the highest quality bearing solutions, in a timely manner and with extensive engineering support.

We don't just make products, we build partnerships. That's the GGB Advantage.

# Content


**1.0 Introduction** ..... 1
1.1 General Characteristics and Advantages ..... 1
*Wide Application Range* ..... 2
*Low Friction Operation* ..... 2
*Wide Product Range of Sizes and Shapes* ..... 2

**2.0 Product Descriptions** ..... 3
*GAR-MAX®* ..... 3
*GAR-FIL®* ..... 4
*HSG* ..... 5
*MLG* ..... 6
*HPM* ..... 7
*HPMB®* ..... 8
*HPF®* ..... 9
*GGB-MEGALIFE™ XT* ..... 10
*Multifil* ..... 11
2.1 Performance Comparison Chart ..... 12

**3.0 Properties** ..... 13
3.1 Physical Properties ..... 13
*High Load Capacity Without Lubrication* ..... 13
*Wide Operating Temperature Range* ..... 13
*Weight Savings* ..... 13
3.2 Performance Comparison ..... 14
3.3 Chemical Resistance ..... 15

**4.0 Data for Designers** ..... 17
4.1 Wear Rate ..... 17
4.2 Frictional Properties ..... 18
4.3 Operating Temperature ..... 19
4.4 Load Capacity ..... 19
4.5 Surface Velocity ..... 20
4.6 pU Factor ..... 20
4.7 Operating Clearances ..... 21
4.8 Dimensional Considerations ..... 21
*Wall Thickness* ..... 21
*Clearance* ..... 21
*Bearing Length* ..... 21
4.9 Shaft Material and Surface Finish ..... 22
4.10 Housing Material ..... 22
4.11 Lubrication ..... 22
4.12 Multifil Bearing Tape Design Features ..... 23
*Design Features* ..... 23
*Rapid, Easy Installation* ..... 24

**5.0 Performance** ..... 25
5.1 Design Factors ..... 25
5.2 Specific Load, p ..... 25
5.3 Sliding Speed, U ..... 26
5.4 pU Factor ..... 26
5.5 Estimating Bearing Life ..... 27
*Cyclic Bearing Life, $L_Q$* ..... 27
*High Load Factor, $a_E$* ..... 27
*Temperature Factor $a_T$* ..... 29
*Mating Material Factor - $a_M$* ..... 29
*Mating Surface Factor - $a_s$* ..... 30
*Bearing Size Factor - $a_B$* ..... 30
5.6 Worked Examples ..... 31
GAR-MAX® ..... 31
GAR-FIL® ..... 32
HPMB® ..... 33
MLG ..... 34

**6.0 Misalignment** ..... 35

**7.0 Installation and Machining** ..... 37
7.1 Installation ..... 37
7.2 Machining of HPMB® Bearings ..... 37
7.3 Fitting ..... 38
*Length* ..... 38
*Outer Diameter* ..... 38
*Inner Diameter* ..... 38
*Deburring* ..... 38
*Drilling* ..... 38

**8.0 Standard Products** ..... 39
8.1 GAR-FIL®, GAR-MAX®, HSG, MLG (Inch Sizes) ..... 39
8.2 GAR-FIL®, GAR-MAX®, HSG, MLG (Metric Sizes) ..... 43
8.3 European GAR-MAX® Size Range ..... 47
8.4 GGB-MEGALIFE™ XT Thrust Washers (Inch Sizes) ..... 49
8.5 GGB-MEGALIFE™ XT Thrust Washers (Metric Sizes) ..... 50
8.6 Datasheet ..... 51
*Formula Symbols and Designations* ..... 52
8.7 Other GGB Bearing Products ..... 53
8.8 Product Information ..... 54
*RoHS - Restriction of Hazardous Substances* ..... 54

**9.0 Your Notes** ..... 55

# 1.0 Introduction

The purpose of this handbook is to provide comprehensive technical information on the characteristics of GGB´s family of fiber reinforced composite bearings, high load, self-lubricating bearings. The information given permits designers to establish the appropriate product required for a particular application. GGB's applications and development engineering services are available to offer solutions for bearings working under unusual operating conditions and/or requiring special designs.

GGB is the world´s largest manufacturer of plain bearings for low maintenance and maintenance free applications. This includes an extensive product portfolio including metal-polymer bearings, injection moulded thermoplastic bearings, fiber reinforced composite bearings and metal and bimetal bearings.

GGB has manufacturing facilities world wide, and has remained the foremost supplier of self-lubricating plain bearings to the world´s industrial and automotive markets for almost 35 years. GGB is continually refining and extending its experimental and theoretical knowledge and, therefore, when using this brochure it is always worthwhile to contact GGB if additional information should be required.

As it is impossible to cover all conditions of operation that arise in practice, customers are advised to conduct prototype testing wherever possible.

## 1.1 General Characteristics and Advantages

To meet the need for high load, self-lubricating bearings that provide low wear rates in a wide variety of applications, GGB has developed a comprehensive family of fiber reinforced, composite self-lubricating bearing products. These bearings combine the excellent lubricating properties of filled PTFE (polytetrafluoroethylene) with the high strength and stability of an oriented glass fiber wound structure.

GGB´s fiber reinforced composite bearings employ a tough, high strength composite structure consisting of epoxy-impregnated, wound glass fibers oriented to provide the radial and axial strength required to support high bearing loads.GAR-MAX® and HSG (High Strength GAR-MAX®) Surface liner of PTFE and high strength fibers twisted together and encapsulated by a high temperature epoxy resin that has been further enhanced with a self-lubricating additive.

GAR-FIL® Proprietary filled PTFE tape liner bonded to the backing.

MLG Surface liner of PTFE and high strength fibers twisted together and encapsulated by a high temperature resin.

HPM Surface liner of PTFE and high strength fibers twisted together and encapsulated by a high temperature epoxy resin that has been further enhanced with PTFE.

HPMB® Surface liner of PTFE and high strength fibers twisted together and encapsulated by a high temperature epoxy resin that has been further enhanced with PTFE and other additives. The liner is easily machinable with a single point tool, either by GGB or by the customer prior to or post installation.

HPF® Surface liner consisting of a proprietary filled PTFE tape liner bonded to the backing.

GGB-MEGALIFE™ XT Thrust washers have a proprietary filled PTFE surface on both sides of the washers supported by a high strength composite inner core.

Multifil Tape bearing product has PTFE tape with propietary fillers that can be easily bonded to any substrate.

## Wide Application Range

Laboratory and field testing have proven that GGB fiber reinforced composite bearings provide outstanding performance in a wide variety of demanding dry or lubricated bearing applications. These include:

- Construction equipment
- Agricultural equipment
- Aerial lifts
- Railroad Applications
- Materials handling equipment
- Processing equipment
- Snowmobile and ATV CVT clutches
- Water turbines
- Waste and recycling equipment
- Packing equipment, and many more.

## Low Friction Operation

GGB self-lubricating fiber reinforced composite bearings are particularly effective in applications where the relative motion is not sfficient to promote circulation of the oil or grease used with more conventional bearings. The natural lubricity of the PTFE encapsulated in the fiber reinforced composite bearing surface assures low friction in dry applications. In fact, in low speed, high pressure type applications, GAR-FIL® and HPMB® bearings offer one of the lowest coefficients of friction of any self-lubricated bearing product.

## Wide Range of Sizes and Shapes

GGB fiber reinforced composite bearings are available in standard sizes from 12 mm to 150 mm [1/2" to 6"] ID with wall thicknesses of 2.5 mm and 5 mm [1/8" and 1/4"], including lengths up to 400 mm [16"].

On special order, ID sizes from 10 mm to over 500 mm [3/8" to over 20"] can be furnished with custom wall thickness and/or length as required.

GGB-MEGALIFE™ XT thrust washers are available in standard sizes with custom sizes available upon request.

Multifil bearing tape is available in thicknesses 0.38 mm [0.015"], 0.76 mm [0.030"], 1.14 mm [0.045"], 1.52 mm [0.060"], 2.29 mm [0.090"], and 3.18 mm [0.125"] and widths 305 mm [12.0"] and 610 mm [24.0"].

Special shapes based on customer requirements are possible as shown below. Contact GGB for details.

Fig. 1: Standard Shapes

Fig. 2: Examples of Special Shapes

# 2.0 Product Descriptions

## GAR-MAX®

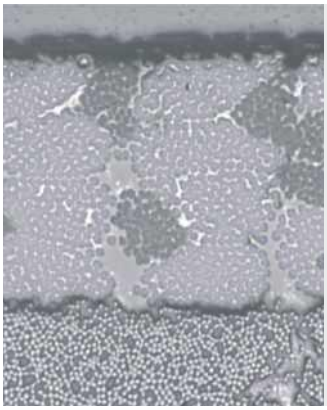

Sliding layer -
Continuous wound PTFE and high-strength fibers encapsulated in an internally lubricated, high temperature filled epoxy resin.

Backing -
Continuous wound fiberglass encapsulated in a high temperature epoxy resin.

| CHARACTERISTICS | POSSIBLE APPLICATIONS | AVAILABILITY |
|---|---|---|
| • High load capacity<br>• Excellent shock and misalignment resistance<br>• Excellent contamination resistance<br>• Very good friction and wear properties<br>• Good chemical resistance | • Steering linkages<br>• Hydraulic cylinder pivots<br>• King pin bearings<br>• Boom lifts, scissor lifts<br>• Cranes, hoists, lift gates<br>• Backhoes, trenchers<br>• Skid steer loaders<br>• Front end loaders | Standard<br>Plain cylindrical bushes<br>Inner diameter range:<br>Metric: 12 - 150 mm<br>Standard: 1/2 - 6"<br>Special order<br>Plain cylindrical bushes<br>Inner diameter range:<br>Metric: 10 - 500 mm<br>Standard: 3/8 - 20"<br>Customized bushing designs.<br>Cylindrical bushes with non-standard lengths and wall thickness, flanged bearings, hexagonal and square bores, liner on outer diameter. |

| BEARING PROPERTIES | METRIC | IMPERIAL |
|---|---|---|
| Ultimate compressive strength $\sigma_c$ | 414 N/mm² | 60 000 psi |
| Maximum static load $p_{sta,max}$ | 210 N/mm² | 30 000 psi |
| Maximum dynamic load $p_{dyn,max}$ | 140 N/mm² | 20 000 psi |
| Maximum sliding speed U | 0.13 m/s | 25 fpm |
| Maximum pU factor | 1.05 N/mm² x m/s | 30 000 psi x fpm |
| Maximum temperature $T_{max}$ | 160 °C | 320 °F |
| Minimum temperature $T_{min}$ | - 195 °C | - 320 °F |

# GAR-FIL®

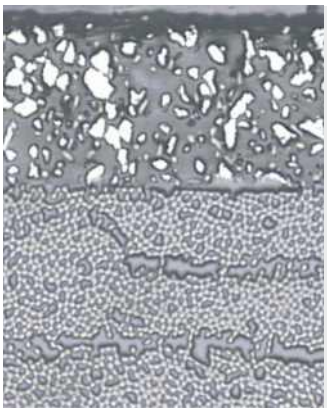

Sliding layer -
Proprietary filled PTFE tape liner, 0.38 mm (.015") standard thickness (0.76mm (.030") available for machining)

Backing -
Continuous wound fiberglass encapsulated in a high temperature epoxy resin.

| CHARACTERISTICS | POSSIBLE APPLICATIONS | AVAILABILITY |
|---|---|---|
| • High load capacity<br>• Good chemical resistance<br>• Machinable bearing surface<br>• High rotational speed capacity<br>• Very good friction and wear properties<br>• Excellent contamination resistance | • Valves<br>• Scissor lifts<br>• Pulleys<br>• Toggle linkages | Standard<br>Plain cylindrical bushes<br>Inner diameter range:<br>Metric: 12 - 150 mm<br>Standard: ½ - 6"<br>Special order<br>Plain cylindrical bushes<br>Inner diameter range:<br>Metric: 10 - 500 mm<br>Standard: ⅜ - 20"<br>Customized bushing designs.<br>Cylindrical bushes with non-standard lengths and wall thickness, flanged bearings, hexagonal and square bores, liner on outer diameter. |

| BEARING PROPERTIES | METRIC | IMPERIAL |
|---|---|---|
| Ultimate compressive strength $\sigma_c$ | 379 N/mm² | 55 000 psi |
| Maximum static load $p_{sta,max}$ | 140 N/mm² | 20 000 psi |
| Maximum dynamic load $p_{dyn,max}$ | 140 N/mm² | 20 000 psi |
| Maximum sliding speed U | 2.50 m/s | 500 fpm |
| Maximum pU factor | 1.23 N/mm² x m/s | 35 000 psi x fpm |
| Maximum temperature $T_{max}$ | 205 °C | 400 °F |
| Minimum temperature $T_{min}$ | - 195 °C | - 320 °F |

https://www.ggbearings.com/en/products/filament-wound/gar-fil

# HSG

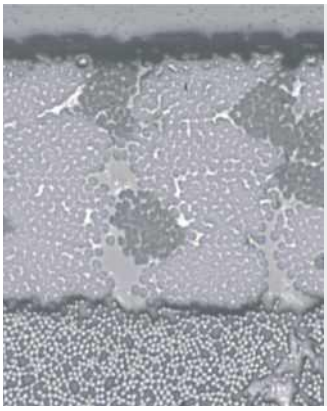

Sliding layer -
Continuous wound PTFE and high-strength fibers encapsulated in an internally lubricated, high temperature filled epoxy resin.

Backing -
Continuous wound fiberglass encapsulated in a high temperature epoxy resin.

| CHARACTERISTICS | POSSIBLE APPLICATIONS | AVAILABILITY |
|---|---|---|
| • High static load capacity - twice as high as standard GAR-MAX® bearings<br>• Excellent shock and misalignment resistance<br>• Excellent contamination resistance<br>• Very good friction and wear properties<br>• Good chemical resistance | • Steering linkages<br>• Hydraulic cylinder pivots<br>• King pin bearings<br>• Boom lifts, scissor lifts<br>• Cranes, hoists, lift gates<br>• Backhoes, trenchers<br>• Skid steer loaders<br>• Front end loaders | Standard<br>Plain cylindrical bushes<br>Inner diameter range:<br>Metric: 12 - 150 mm<br>Standard: 1/2 - 6"<br>Special order<br>Plain cylindrical bushes<br>Inner diameter range:<br>Metric: 10 - 500 mm<br>Standard: 3/8 - 20"<br>Customized bushing designs.<br>Cylindrical bushes with non-standard lengths and wall thickness, flanged bearings, hexagonal and square bores, liner on outer diameter. |

| BEARING PROPERTIES | SI UNIT VALUE | ANSI UNIT VALUE |
|---|---|---|
| Ultimate compressive strength $\sigma_c$ | 621 N/mm² | 90 000 psi |
| Maximum static load $p_{sta,max}$ | 415 N/mm² | 60 000 psi |
| Maximum dynamic load $p_{dyn,max}$ | 140 N/mm² | 20 000 psi |
| Maximum sliding speed U | 0.13 m/s | 25 fpm |
| Maximum pU factor | 1.05 N/mm² x m/s | 30 000 psi x fpm |
| Maximum temperature $T_{max}$ | 160 °C | 320 °F |
| Minimum temperature $T_{min}$ | - 195 °C | - 320 °F |

# MLG

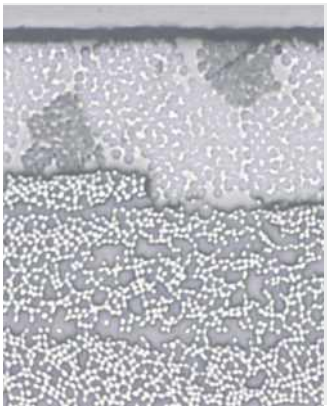

Sliding layer -
Continuous wound PTFE and high-strength fibers encapsulated in high temperature epoxy resin.

Backing -
Continuous wound fiberglass encapsulated in a high temperature epoxy resin.

| CHARACTERISTICS | POSSIBLE APPLICATIONS | AVAILABILITY |
|---|---|---|
| • Value engineered filament wound bearing for lighter duty applications<br>• High load capacity<br>• Good misalignment resistance<br>• Excellent shock resistance<br>• Good friction and wear properties<br>• Good chemical resistance | • Construction and earth moving equipment<br>• Conveyors<br>• Cranes and hoists<br>• Hydraulic cylinder pivots | Standard<br>Plain cylindrical bushes<br>Inner diameter range:<br>Metric: 12 - 150mm<br>Standard: 1/2 - 6"<br>Special order<br>Plain cylindrical bushes<br>Inner diameter range:<br>Metric: 10 - 500 mm<br>Standard: 3/8 - 20"<br>Customized bushing designs.<br>Cylindrical bushes with non-standard lengths and wall thickness, flanged bearings, hexagonal and square bores, liner on outer diameter. |

| BEARING PROPERTIES | METRIC | IMPERIAL |
|---|---|---|
| Ultimate compressive strength $\sigma_c$ | 414 N/mm$^2$ | 60 000 psi |
| Maximum static load $p_{sta,max}$ | 210 N/mm$^2$ | 30 000 psi |
| Maximum dynamic load $p_{dyn,max}$ | 140 N/mm$^2$ | 20 000 psi |
| Maximum sliding speed $U_{lim}$ | 0.13 m/s | 25 fpm |
| Maximum pU factor | 1.05 N/mm$^2$ x m/s | 30 000 psi x fpm |
| Maximum temperature $T_{max}$ | 160 °C | 320 °F |
| Minimum temperature $T_{min}$ | - 195 °C | - 320 °F |

# HPM

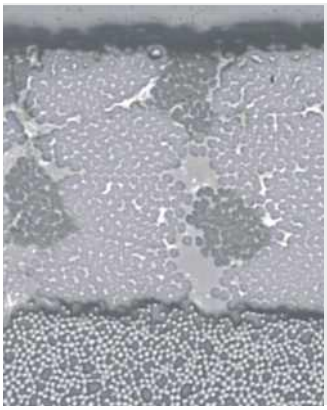

Sliding layer -
Continuous wound PTFE and high-strength fibers encapsulated in a internally-lubricating, high temperature filled epoxy resin.

Backing -
Continuous wound fiberglass encapsulated in a high temperature epoxy resin.

| CHARACTERISTICS | POSSIBLE APPLICATIONS | AVAILABILITY |
|---|---|---|
| • Designed for hydropower applications<br>• High load capacity<br>• Excellent shock and edge loading capacity<br>• Low friction, superior wear rate and bearing life<br>• Excellent corrosion resistance<br>• Dimensional stability - very low water absorption, low swelling<br>• Environmentally friendly | • Servo-motor bearings<br>• Linkage bearings<br>• Wicket gate bearings<br>• Guide vane bearings<br>• Intake gate sliding segments<br>• Spillway gate bearings<br>• Trash rake bearings<br>• Fish screen bearings<br>• Trunnion bearings<br>• Blade bearings<br>• Injector bearings<br>• Delector bearings<br>• Ball and butterfly trunnion bearings | Standard<br>Plain cylindrical bushings<br>Special order<br>Cylindrical bushes from 10 mm to 500 mm (20"), customized bearing designs |

| BEARING PROPERTIES | METRIC | IMPERIAL |
|---|---|---|
| Ultimate compressive strength $\sigma_c$ | 345 N/mm² | 50 000 psi |
| Maximum static load $p_{sta,max}$ | 210 N/mm² | 30 000 psi |
| Maximum dynamic load $p_{dyn,max}$ | 140 N/mm² | 20 000 psi |
| Maximum sliding speed U | 0.13 m/s | 25 fpm |
| Maximum pU factor | 1.23 N/mm² x m/s | 35 000 psi x fpm |
| Maximum temperature $T_{max}$ | 160 °C | 320 °F |
| Minimum temperature $T_{min}$ | - 195 °C | - 320 °F |

# HPMB® Machinable Bearing Material

Sliding layer -
Machinable continuous wound PTFE and high-strength fibers encapsulated in an internally lubricated, high temperature filled epoxy resin.

Backing -
Continuous wound fiberglass encapsulated in a high temperature epoxy resin.

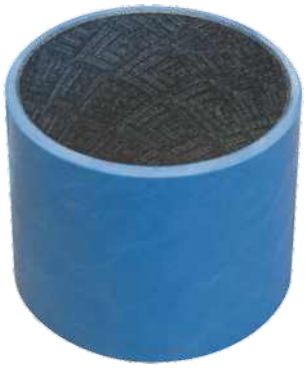

| CHARACTERISTICS | POSSIBLE APPLICATIONS | AVAILABILITY |
|---|---|---|
| • Machinable inner and outer diameters for superior application precision, circularity and cylindricity tolerances<br>• Pre-machined high precision HPMB bearings available for immediate installation<br>• High precision through easy single point machining of the bearing liner, on-site prior to installation<br>• Superior precision achieved with post-installation (inner diameter tolerance IT7 attainable) single point machining of the bearing liner<br>• High load capacity and excellent dithering performance<br>• Excellent shock and edge loading capacity<br>• Low friction with negligible stick-slip<br>• Low wear rate for extended bearing life<br>• Excellent corrosion resistance<br>• Dimensionally stable - very low water absorption, low swelling<br>• Environmentally friendly grease-free operation | • Steering linkages<br>• Hydraulic cylinder pivots<br>• King pin bearings<br>• Boom lifts, scissor lifts<br>• Cranes, hoists, lift gates<br>• Backhoes, trenchers<br>• Skid steer loaders<br>• Front end loaders<br>• Injection molding machines<br>• Railway applications<br>• Water turbines<br>• Valves | Special order<br>Finished cylindrical bushings, pre-machined cylindrical bushings, flanged cylindrical bushings (subject to design review) |

| BEARING PROPERTIES | METRIC | IMPERIAL |
|---|---|---|
| Ultimate compressive strength $\sigma_c$ | 414 N/mm$^2$ | 60 000 psi |
| Maximum static load $p_{sta,max}$ | 210 N/mm$^2$ | 30 000 psi |
| Maximum dynamic load $p_{dyn,max}$ | 140 N/mm$^2$ | 20 000 psi |
| Maximum sliding speed U | 0.13 m/s | 25 fpm |
| Maximum pU factor | 1.23 N/mm$^2$ x m/s | 35 000 psi x fpm |
| Maximum temperature $T_{max}$ | 160 °C | 320 °F |
| Minimum temperature $T_{min}$ | - 195 °C | - 320 °F |

# HPF®

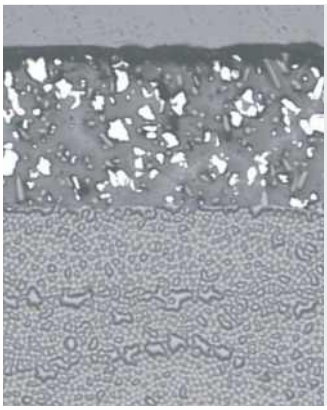

Sliding layer -
Proprietary filled PTFE tape liner.

Backing -
Flat material continuous woven cloth laminate impregnated and cured with epoxy resin.

| CHARCTERISTICS | POSSIBLE APPLICATIONS | AVAILABILITY |
|---|---|---|
| • Designed for hydropower applications<br>• Machinable bearing surface<br>• High load capacity<br>• Low friction, superior wear rate and bearing life<br>• Excellent corrosion resistance<br>• Dimensional stability - very low water absorption, low swelling<br>• Environmentally friendly | • Servo-motor bearings<br>• Operating ring sliding segments<br>• Linkage bearings<br>• Wicket gate bearings<br>• Guide vane bearings<br>• Intake gate sliding segments<br>• Spillway gate bearings<br>• Trash rake bearings<br>• Fish screen bearings<br>• Trunnion bearings<br>• Blade bearings<br>• Injector bearings<br>• Delector bearings<br>• Ball and butterfly trunnion bearings | Special order<br>Cylindrical bearings, diameters up to 500 mm (20"); thrust bearings and sliding plates |

| BEARING PROPERTIES | METRIC | IMPERIAL |
|---|---|---|
| Ultimate compressive strength $\sigma_c$ | 379 N/mm² | 55 000 psi |
| Maximum static load $p_{sta,max}$ | 140 N/mm² | 20 000 psi |
| Maximum dynamic load $p_{dyn,max}$ | 140 N/mm² | 20 000 psi |
| Maximum sliding speed U | 2.5 m/s | 500 fpm |
| Maximum pU factor | 1.23 N/mm² x m/s | 35 000 psi x fpm |
| Maximum temperature $T_{max}$ | 140 °C | 285 °F |
| Minimum temperature $T_{min}$ | - 195 °C | - 320 °F |

# GGB-MEGALIFE™ XT Thrust Washers

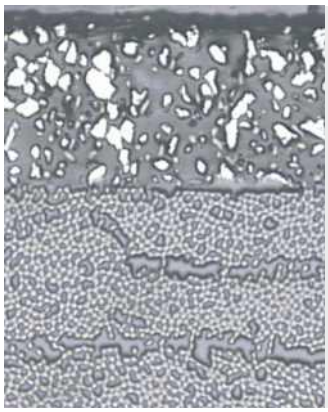

Sliding layer -
Proprietary filled PTFE tape liner on both sides.

Core -
Continuously woven layer of filament fiberglass encapsulated in a high temperature epoxy resin.

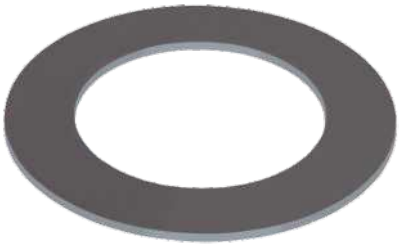

| CHARCTERISTICS | POSSIBLE APPLICATIONS | AVAILABILITY |
|---|---|---|
| • Excellent shock resistance<br>• High load capacity<br>• Excellent misalignment resistance<br>• Excellent contamination resistance<br>• Good surface speed capability<br>• Very good friction and wear properties<br>• Good chemical resistance | • Pulley spacers<br>• Gear spacers<br>• Aerial lifts<br>• Fork lift masts<br>• King pins<br>• Steering links<br>• Lift gates<br>• Cranes<br>• Backhoes<br>• Valve actuator linkages | Standard<br>Thrust washers, standard sizes<br>see pages 49-50<br>Special order<br>Thrust washers with non-standard dimensions, customized bearing designs |

| BEARING PROPERTIES | METRIC | IMPERIAL |
|---|---|---|
| Ultimate compressive strength $\sigma_c$ | 207 N/mm² | 30 000 psi |
| Maximum static load $p_{sta,max}$ | 140 N/mm² | 20 000 psi |
| Maximum dynamic load $p_{dyn,max}$ | 140 N/mm² | 20 000 psi |
| Maximum sliding speed U | 0.50 m/s | 100 fpm |
| Maximum pU factor | 1.23 N/mm² x m/s | 35 000 psi x fpm |
| Maximum temperature $T_{max}$ | 175 °C | 350 °F |
| Minimum temperature $T_{min}$ | - 195 °C | - 320 °F |

# Multifil

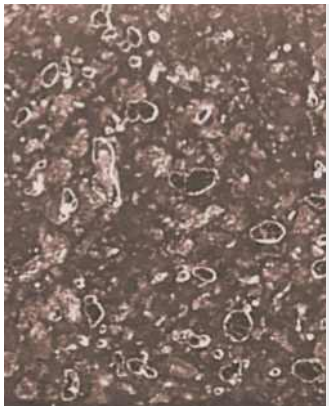

Structure -
PTFE tape with proprietary filler system

| CHARACTERISTICS | POSSIBLE APPLICATIONS | AVAILABILITY |
|---|---|---|
| • Superior sliding bearing material which can be easily bonded to any clean, rigid substrate<br>• Reduces vibration | • Machined tool ways<br>• Sliding applications where bearing tape can be added on | Standard<br>Sliding plates, tape with 0.38 mm (0.015") to 3.2 mm (0.125") thickness and 305 mm (12") or 610 mm (24") width |

| BEARING PROPERTIES | METRIC | IMPERIAL |
|---|---|---|
| Maximum static load $p_{sta,max}$ | 70 N/mm² | 10 000 psi |
| Maximum dynamic load $p_{dyn,max}$ | 35 N/mm² | 5 000 psi |
| Maximum sliding speed U | 2.5 m/s | 500 fpm |
| Maximum pU factor | 0.32 N/mm² x m/s | 9 000 psi x fpm |
| Maximum temperature $T_{max}$ | 280 °C | 540 °F |
| Minimum temperature $T_{min}$ | - 200 °C | - 330 °F |

# 2.1 Performance Comparison Chart

| BEARING PROPERTIES | Load Carrying Capability | Shock Loading Resistance | Speed Capability | Contamination Resistance | Misalignment Resistance | Machinability |
|---|---|---|---|---|---|---|
| GAR-MAX® | 1 | 2 | 3 | 1 | 2 | 4 |
| GAR-FIL® | 1 | 3 | 1 | 2 | 4 | 1 |
| HSG | 1 | 1 | 3 | 1 | 1 | 4 |
| MLG | 1 | 2 | 3 | 2 | 3 | 4 |
| HPM | 1 | 2 | 3 | 1 | 2 | 4 |
| HPMB® | 1 | 2 | 3 | 1 | 2 | 1 |
| HPF®, Sliding Plate | 1 | 3 | 1 | 2 | 4 | 1 |
| HPF®, Cylindrical Bearing | 1 | 3 | 1 | 2 | 4 | 1 |
| GGB-MEGALIFE™ XT | 2 | 3 | 2 | 2 | 3 | 2 |
| Multifil | 3 | 3 | 1 | 2 | 2 | 1 |

*Table 1: Performance comparison chart*

| RANKING | |
|---|---|
| 1 | Excellent |
| 2 | Good |
| 3 | Fair |
| 4 | Not Recommended |

# 3.0 Properties

## 3.1 Physical Properties

Table 2 shows the physical properties of GGB´s fiber reinforced composite bearings.

### High Load Capacity Without Lubrication

The ultimate compressive strength and maximum dynamic capacity of GGB fiber reinforced composite bearings without lubrication exceed those of most other conventional/traditional bearing materials with lubrication.

### Wide Operating Temperature Range

GGB fiber reinforced composite bearings can operate at much higher temperatures than lubricated bearings. This opens new application opportunities where metallic bearings cannot function because of the limited temperature range of most greases and oils.

### Weight Savings

GGB fiber reinforced composite bearings are 75% lighter than similarly sized bronze or steel bearings. This can result in a substantial weight saving, especially with larger bearings.

| Physical Properties | Units | GAR-MAX® | GAR-FIL® | HSG | MLG | HPM | HPMB® | HPF® Sliding Plates | GGB-MEGALIFE™ XT | Multifil |
|---|---|---|---|---|---|---|---|---|---|---|
| Ultimate Compressive Strength | N/mm² | 414 | 379 | 621 | 414 | 345 | 414** | 379 | 207 | - |
| | psi | 60 000 | 55 000 | 90 000 | 60 000 | 50 000 | 60 000 | 55 000 | 30 000 | - |
| Static Load Capacity | N/mm² | 210 | 140 | 415 | 210 | 210 | 210 | 140 | 140 | 70 |
| | psi | 30 000 | 20 000 | 60 000 | 30 000 | 20 000 | 30 000 | 20 000 | 20 000 | 10 000 |
| Maximum Dynamic Load Capacity | N/mm² | 140 | 140 | 140 | 140 | 140 | 140 | 140 | 140 | 35 |
| | psi | 20 000 | 20 000 | 20 000 | 20 000 | 20 000 | 20 000 | 20 000 | 20 000 | 5,000 |
| Max. Relative Surface Speed | m/s | 0.13 | 2.50 | 0.13 | 0.13 | 0.13 | 0.13 | 2.50 | 0.50 | 2.5 |
| | fpm | 25 | 500 | 25 | 25 | 25 | 25 | 500 | 100 | 500 |
| Maximum pU Factor | N/mm² x m/s | 1.05 | 1.23 | 1.05 | 1.05 | 1.23 | 1.23 | 1.23 | 1.23 | 0.32 |
| | psi x fpm | 30 000 | 35 000 | 30 000 | 30 000 | 35 000 | 35 000 | 35 000 | 35 000 | 9 000 |
| Max. Operating Temperature | °C | 160 | 205 | 160 | 160 | 160 | 160 | 140 | 175 | 280 |
| | °F | 320 | 400 | 320 | 320 | 320 | 320 | 285 | 350 | 540 |
| Min. Operating Temperature | °C | - 195 | - 195 | - 195 | - 195 | - 195 | - 195 | - 195 | - 195 | - 200 |
| | °F | - 320 | - 320 | - 320 | - 320 | - 320 | - 320 | - 320 | - 320 | - 330 |
| Thermal Expansion Rate - Hoop | $10^{-6}$/K | 12.6 | 12.6 | 12.6 | 12.6 | 12.6 | 12.6 | 10.8* | 12.6* | - |
| | $10^{-6}$/F | 7.0 | 7.0 | 7.0 | 7.0 | 7.0 | 7.0 | 6.0* | 7.0* | - |
| Thermal Expansion Rate - Axial | $10^{-6}$/K | 27.0 | 27.0 | 27.0 | 27.0 | 27.0 | 27.0 | - | - | - |
| | $10^{-6}$/F | 15.0 | 15.0 | 15.0 | 15.0 | 15.0 | 15.0 | - | - | - |
| Specific Gravity | - | 1.87 | 1.96 | 1.87 | 1.87 | 1.87 | 1.87 | 1.9 | 1.85 | 2.37 |

* Lengthwise; ** For details contact GGB Applications Engineering department

*Table2: Physical properties of GGB fiber reinforced composite bearings*

# 3.2 Performance Comparison

Table 3 presents the properties information in a convenient table to help you choose the best product for your application.

| Material | Max. Dynamic Capacity (<0.025 m/s (5 sft/min)) | | Maximum Temperature | | Thermal Expansion Rate - Hoop | | Specific Gravity |
|---|---|---|---|---|---|---|---|
| | N/mm² | psi | °C | °F | 10-6/K | 10-6/°F | |
| Cast Bronze* | 41 | 6 000 | 71 | 160 | 18.0 | 10 | 8.80 |
| Porous Bronze** | 28 | 4 000 | 71 | 160 | 18.0 | 10 | 7.50 |
| Alloyed Bronze* | 69 | 10 000 | 93 | 200 | 28.8 | 16 | 8.10 |
| Steel-Backed Bronze* | 24 | 3 500 | 93 | 200 | 14.4 | 8 | 8.00 |
| Hardened Steel* | 276 | 40 000 | 93 | 200 | 12.6 | 7 | 7.90 |
| Zinc Aluminum* | 38 | 5 500 | 93 | 200 | 27.0 | 15 | 5.00 |
| Fabric-Reinforced Phenolic* | 41 | 6 000 | 93 | 200 | 36.0 | 20 | 1.60 |
| Reinforced PTFE | 14 | 2 000 | 260 | 500 | 99.0 | 55 | 2.00 |
| GAR-MAX® | 140 | 20 000 | 160 | 320 | 12.6 | 7 | 1.87 |
| GAR-FIL® | 140 | 20 000 | 205 | 400 | 12.6 | 7 | 1.96 |
| HSG | 140 | 20 000 | 160 | 320 | 12.6 | 7 | 1.87 |
| MLG | 140 | 20 000 | 160 | 325 | 12.6 | 7 | 1.87 |
| HPM | 140 | 20 000 | 160 | 320 | 12.6 | 7 | 1.87 |
| HPMB® | 140 | 20 000 | 160 | 325 | 12.6 | 7 | 1.87 |
| HPF®, Sliding Plate | 140 | 20 000 | 140 | 285 | 10.8*** | 6.0*** | 1.90 |
| GGB-MEGALIFE™ XT | 140 | 20 000 | 175 | 350 | 12.6*** | 7.0*** | 1.85 |
| Multifil | 35 | 5 000 | 280 | 540 | - | - | 2.37 |

* With lubrication; ** Oil impregnated; *** Lengthwise

*Table 3: Comparison of various bearing materials*

## Note

Actual performance depends on the interaction of many parameters that may vary with the specific application. For example, maximum values listed for loads, speeds, and temperature cannot be used simultaneously. However, in certain applications, individual values can be exceeded. For conditions that do exceed the recommended design limits, contact our Engineering Department.

# 3.3 Chemical Resistance

GGB's fiber reinforced composite bearings are resistant to a wide variety of chemicals including acids, bases, salt solutions, oils, fuels, alcohols, solvents and gases.

GGB's fiber reinforced composite bearings offer greater chemical resistance than metallic bearings. In particular, GAR-FIL® is resistant to the greatest number of chemicals, and is used in a wide range of valves employed in the chemical processing industry as well as for fire-safe valves.

The chemical resistance of GGB's fiber reinforced composite bearings to many common chemicals at 70 °F is shown in Table 4.

We recommend conducting a chemical resistance test prior to specifying a bearing that will be exposed to a chemical. An effective test (ASTM D 543) is to submerge a sample bearing in the subject chemical at the maximum anticipated operating temperature for seven days. If there is a change in the weight, dimensions, or compressive strength of the bearing, then the bearing is not resistant to the chemical.

| | GAR-MAX® | GAR-FIL® | HSG | MLG | HPM / HPMB® | HPF® / GGB-MEGALIFE™ XT | Multifil |
|---|---|---|---|---|---|---|---|
| **Acids 10%** | | | | | | | |
| Acetic | Yes | Yes | Yes | Yes | Yes | Yes | No |
| Arsenic | No | Yes | No | No | No | Yes | Yes |
| Boric | Yes | Yes | Yes | Yes | Yes | Yes | Yes |
| Carbonic | No | No | No | No | No | No | No |
| Citric | Yes | Yes | Yes | Yes | Yes | Yes | Yes |
| Hydrochloric | Yes | Yes | Yes | Yes | Yes | Yes | No |
| Hydro-fluoric | No | No | No | No | No | No | No |
| Nitric | No | No | No | No | No | No | No |
| Sulfuric | Yes | Yes | Yes | Yes | Yes | Yes | Yes |
| **Bases 10%** | | | | | | | |
| Aluminum Hydroxide | Yes | Yes | Yes | Yes | Yes | Yes | Yes |
| Calcium Hydroxide | Yes | Yes | Yes | Yes | Yes | Yes | Yes |
| Magnesium Hydroxide | Yes | Yes | Yes | Yes | Yes | Yes | Yes |
| Potassium Hydroxide | Yes | Yes | Yes | Yes | Yes | Yes | Yes |
| Sodium Hydroxide | Yes | Yes | Yes | Yes | Yes | Yes | Yes |
| **Salts** | | | | | | | |
| Aluminum Chloride | Yes | Yes | Yes | Yes | Yes | Yes | Yes |
| Aluminum Nitrate | Yes | Yes | Yes | Yes | Yes | Yes | Yes |
| Aluminum Sulfate | Yes | Yes | Yes | Yes | Yes | Yes | Yes |
| Calcium Chloride | Yes | Yes | Yes | Yes | Yes | Yes | Yes |
| Ferric Chloride | Yes | Yes | Yes | Yes | Yes | Yes | Yes |
| Magnesium Carbonate | Yes | Yes | Yes | Yes | Yes | Yes | Yes |
| Magnesium Chloride | Yes | Yes | Yes | Yes | Yes | Yes | Yes |
| Magnesium Sulfate | Yes | Yes | Yes | Yes | Yes | Yes | Yes |
| Sodium Acetate | Yes | Yes | Yes | Yes | Yes | Yes | Yes |
| Sodium Bicarbonate | Yes | Yes | Yes | Yes | Yes | Yes | Yes |
| Sodium Bisulfate | Yes | Yes | Yes | Yes | Yes | Yes | Yes |
| Sodium Chloride | Yes | Yes | Yes | Yes | Yes | Yes | Yes |
| Sodium Nitrate | Yes | Yes | Yes | Yes | Yes | Yes | Yes |
| Zinc Sulfate | Yes | Yes | Yes | Yes | Yes | Yes | Yes |
| **Alcohols** | | | | | | | |
| Acetol | Yes | Yes | Yes | Yes | Yes | Yes | Yes |

| | GAR-MAX® | GAR-FIL® | HSG | MLG | HPM / HPMB® | HPF® / GGB-MEGALIFE™ XT | Multifil |
|---|---|---|---|---|---|---|---|
| Allyl | No | No | No | No | No | No | No |
| Amyl | Yes | Yes | Yes | Yes | Yes | Yes | Yes |
| Butyl | No | No | No | No | No | No | No |
| Ethyl | Yes | Yes | Yes | Yes | Yes | Yes | Yes |
| Iso Butyl | Yes | Yes | Yes | Yes | Yes | Yes | Yes |
| Iso Propyl | Yes | Yes | Yes | Yes | Yes | Yes | Yes |
| Methyl | Yes | Yes | Yes | Yes | Yes | Yes | Yes |
| Propyl | Yes | Yes | Yes | Yes | Yes | Yes | Yes |
| **Solvents** | | | | | | | |
| Acetone | Yes | Yes | Yes | Yes | Yes | Yes | Yes |
| Benzene | No | No | No | No | No | No | No |
| Carbon Tetrachloride | Yes | Yes | Yes | Yes | Yes | Yes | Yes |
| Methylene Chloride | No | No | No | No | No | No | No |
| Methyl Ethyl Ketone | Yes | Yes | Yes | Yes | Yes | Yes | Yes |
| Naphtha | Yes | Yes | Yes | Yes | Yes | Yes | Yes |
| Toluol | Yes | Yes | Yes | Yes | Yes | Yes | Yes |
| Trichlorethane | No | Yes | No | No | No | Yes | Yes |
| **Oils** | | | | | | | |
| Cottonseed | Yes | Yes | Yes | Yes | Yes | Yes | Yes |
| Crude Oil | Yes | Yes | Yes | Yes | Yes | Yes | Yes |
| Hydraulic Fluids | Yes | Yes | Yes | Yes | Yes | Yes | Yes |
| Linseed Oil | Yes | Yes | Yes | Yes | Yes | Yes | Yes |
| Motor Oil | Yes | Yes | Yes | Yes | Yes | Yes | Yes |
| Transmission Fluids | Yes | Yes | Yes | Yes | Yes | Yes | Yes |
| **Fuels** | | | | | | | |
| Diesel | Yes | Yes | Yes | Yes | Yes | Yes | Yes |
| Gasoline | Yes | Yes | Yes | Yes | Yes | Yes | Yes |
| Jet Fuel | Yes | Yes | Yes | Yes | Yes | Yes | Yes |
| Kerosene | Yes | Yes | Yes | Yes | Yes | Yes | Yes |
| Gases | Yes | Yes | Yes | Yes | Yes | Yes | Yes |
| Acetylene Bromine | No | No | No | No | No | No | No |
| Butane | Yes | Yes | Yes | Yes | Yes | Yes | Yes |
| Carbon Dioxide | Yes | Yes | Yes | Yes | Yes | Yes | Yes |
| Chlorine | No | Yes | No | No | No | Yes | Yes |
| Ethers | Yes | Yes | Yes | Yes | Yes | Yes | Yes |
| Fluorine | No | No | No | No | No | No | No |
| Hydrogen | Yes | Yes | Yes | Yes | Yes | Yes | Yes |
| Natural Gas | Yes | Yes | Yes | Yes | Yes | Yes | Yes |
| Nitrogen | Yes | Yes | Yes | Yes | Yes | Yes | Yes |
| Ozone | Yes | Yes | Yes | Yes | Yes | Yes | Yes |
| Propane | Yes | Yes | Yes | Yes | Yes | Yes | Yes |
| Sulfur Dioxide | Yes | Yes | Yes | Yes | Yes | Yes | Yes |
| **Miscellaneous** | | | | | | | |
| Anhydrous Ammonia | No | No | No | No | No | No | No |
| Detergents | Yes | Yes | Yes | Yes | Yes | Yes | Yes |
| Ethylene Glycol | Yes | Yes | Yes | Yes | Yes | Yes | Yes |
| Formaldehyde | Yes | Yes | Yes | Yes | Yes | Yes | Yes |
| Freon | Yes | Yes | Yes | Yes | Yes | Yes | Yes |
| Hydrogen Peroxide | No | No | No | No | No | No | No |
| Lime | Yes | Yes | Yes | Yes | Yes | Yes | Yes |
| Water | Yes | Yes | Yes | Yes | Yes | Yes | Yes |
| Sea water | Yes | Yes | Yes | Yes | Yes | Yes | Yes |

*Table 4: Chemical Resistance*

# 4.0 Data for Designers

## 4.1 Wear Rate

In the high load applications anticipated for fiber reinforced composite bearings, radial displacement will result from a combination of many variables. These include adhesive wear, abrasion, deformation due to misalignment of the shaft, high interface temperatures, ingress of dirt, fluid contamination and mating surface conditions. With design pressures of less than 69 N/mm² [10,000 psi], millions of cycles can be achieved with GAR-MAX®, HSG, GAR-FIL®, HPMB®, HPM and HPF®, bearings.

Fig. 3 and Fig. 4 show the rate of wear measured in continuous cycle testing for a GAR-MAX®, HPMB® and GAR-FIL® bearings.

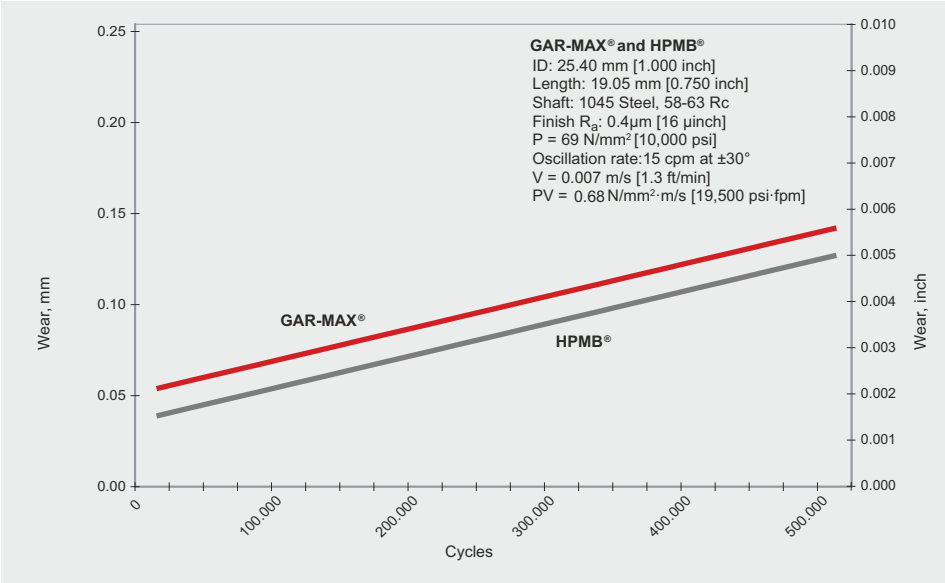


*Fig. 3: Wear rate for GAR-MAX® and HPMB®*

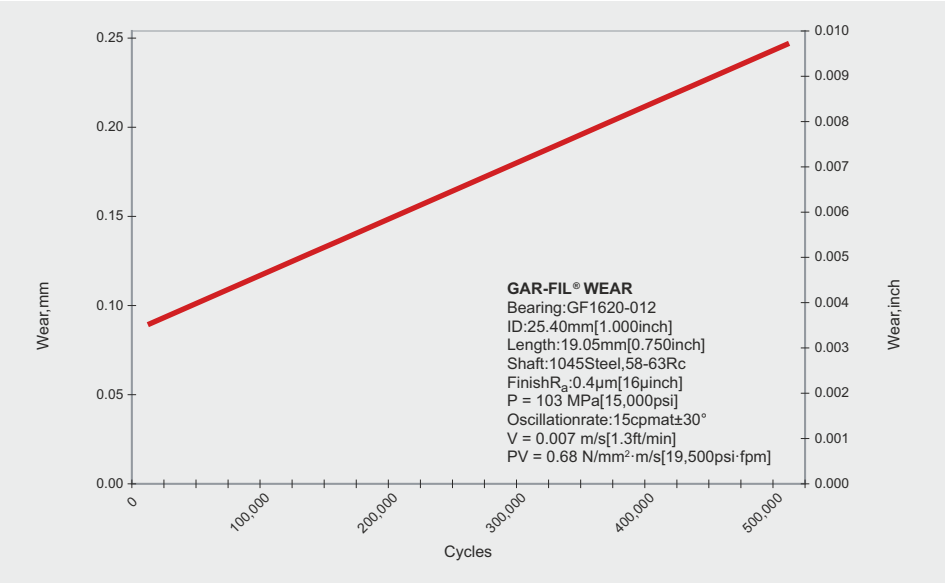


*Fig. 4: Wear rate for GAR-FIL®*

# 4.2 Frictional Properties

The prime factors affecting the friction of fiber reinforced composite bearings are pressure, speed, temperature and mating surface conditions. Generally, the pressure is the most influential.

Fig. 5 shows how friction changes at various pressures. This information can be used to estimate the torque required to initiate motion in GGB fiber reinforced composite bearings:

(4.2.1) [N·m]

$$\text{Torque} = \frac{\mu \cdot F \cdot D_i}{2000}$$

or

(4.2.2) [lbs·in]

$$\text{Torque} = \frac{\mu \cdot F \cdot D_i}{2}$$

| WHERE | |
|---|---|
| μ | Coefficient of friction |
| F | Applied load, [Newtons] or [pounds] |
| $D_I$ | Bearing nominal ID, [mm] or [inches] |

With frequent starts and stops, the static coefficient of friction is approximately equal to or slightly less than the dynamic coefficient of friction as measured in laboratory testing. After progressively longer periods of sitting idle or dwell under load (e.g., of hours or days), the static coefficient of friction of the first movement has been measured to be up to 200% higher, particularly before bedding-in. This phenomenon must be considered when designing long dwell period applications. Extremely low torque applications should be monitored or specifically tested for friction when prime mover torque requirements must be determined.

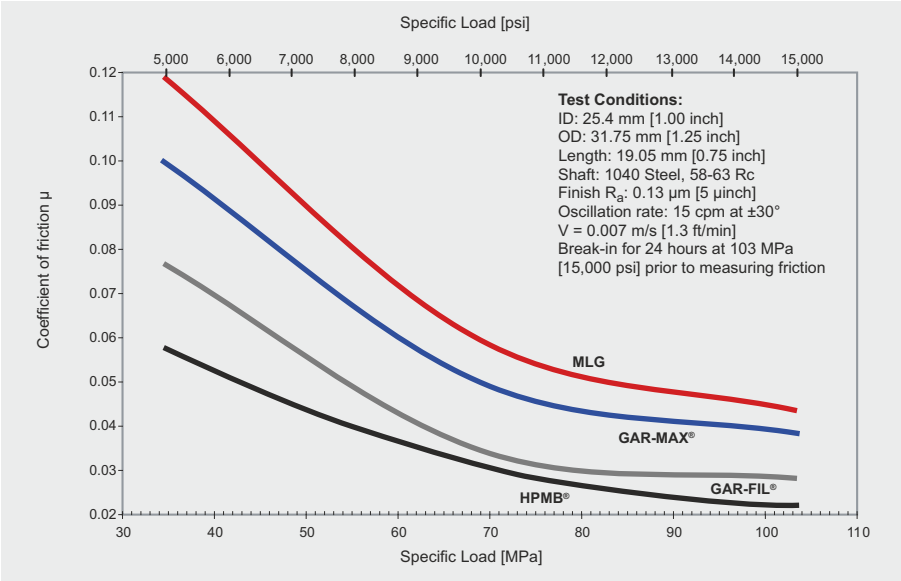


*Fig.5: Coefficient of friction vs specific load*

# 4.3 Operating Temperature

Operating temperature is an important consideration when specifying bearing products since temperature will have a direct affect on bearing load capacity and wear resistance. GGB fiber reinforced composite bearings consist of a rugged outer shell of fiber reinforced composite fiberglass encapsulated in high temperature epoxy.

This combination of materials enables GGB fiber reinforced composite bearings to operate at higher temperatures than most other conventional plain bearings as indicated in Table 3.

At elevated temperatures GGB fiber reinforced composite bearings have reduced load carrying capabilities due to the softening of the self-lubricating surfaces.

However, GAR-MAX®, MLG, HPMB®, and HPM are not influenced by temperature to the same degree as GAR-FIL® and HPF®. GAR-FIL® bearings have been used in low temperature (cryogenic) applications.

# 4.4 Load Capacity

The maximum unit load which can be supported by fiber reinforced composite bearings will depend upon the type of load. It will be highest under steady loads, whereas, dynamic loads or oscillating motion, which produce fatigue stresses in the bearing, will result in a reduction of load capacity.

The maximum unit loads specified in Table 2 assume good alignment between the bearing and mating surface and running clearances listed in the standard product tables on pages 39 through 48.

The maximum static and dynamic loads given in Table 2 are based on bearings having a wall thickness of 2.5 mm [0.100 inch] or greater. Thin-walled bearings, those with a wall thickness between 1.5 mm [0.060 inch] and 2.5 mm [0.100 inch] have a reduced load capacity because of the reduced number of fiber reinforced composite fiberglass crossovers that constitute the backing material. Wall thicknesses greater than 6.35 mm [0.250 inch] do not increase load capacity.

Many applications for GAR-MAX®, HBMB®, and HSG bearings involve applied loads plus the presence of shock and impulse loading along with additional loads due to structural bending. As an example, hydraulic cylinder pivots or clevis joints used in front end loaders, graders, and other types of of-highway vehicles require the consideration of misalignment and G-impact force. Experience gained in the application of GAR-MAX® and HSG bearings on this type of equipment has led us to recommend the maximum specific load (pressures) shown in Table 5. Greater specific loads have shown surface distress in operation since the cumulative influence of misalignment and shock will increase the actual specific load.

The bearing length can also influence the distribution of load along the length of the bearing. A bearing that is heavily loaded and having a relatively long length will, due to shaft deflection, have disproportionately high unit loading at each end. For this reason, we do not recommend length-to-diameter ratios that are greater than 2.0. Conversely, very short bearings, those with length-to-diameter ratios less than 0.25 are not recommended because of potential bearing retention problems.

| Application | Design Specific Load* | | Impact [G] |
|---|---|---|---|
| | N/mm² | psi | |
| Dozer Yoke | 34 | 5,000 | 3 |
| Excavators | 34 | 5,000 | 3 |
| Back Hoes | 34 | 5,000 | 3 |
| Loader Linkages | 34 | 5,000 | 3 |
| Rollers | 48 | 7,000 | 2 |
| Bogie Wheel Pivots | 48 | 7,000 | 2 |
| Track Frame Pivots | 48 | 7,000 | 2 |
| Steer Cylinders | 69 | 10,000 | 1 |
| Control Linkage | 69 | 10,000 | 1 |
| Dump/Swing Cylinders | 69 | 10,000 | 1 |
| * Includes hydraulic check valve pressure but does not include impact, misalignment or vehicle driving force | | | |

*Table5: Specific application impact loading factors*

# 4.5 Surface Speed

GGB´s fiber reinforced composite bearings can operate over a wide range of operating velocities as shown in Table 2.

GAR-FIL® and HPF® bearings can operate without lubrication at speeds up to 2.5 m/s [500 fpm] with a maximum pU value to 0.3 N/mm² x m/s [9,000 psi x fpm]. This performance capability is due to the proprietary filled-PTFE liner.

Since surface velocity influences the amount of heat generated in a plain bearing, additional clearance may be required at higher operating speeds. With GAR-FIL® and HPF® bearings, when operating over 0.25 m/s [50 fpm], additional clearances are required to accommodate for thermal expansion due to the heat generated.

GAR-MAX®, HSG, MLG, HPMB® and HPM bearings, which have a maximum speed limit of 0.13 m/s [25 fpm], are more suitable for high-load and low-speed applications. Since most GAR-MAX®, HSG, MLG, HPMB® and HPM bearings are designed to operate at less than 0.05 m/s [10 fpm], additional clearances are normally not required.

GGB-MEGALIFE™ XT thrust bearings are limited to 0.50 m/s [100 fpm].

Multifil bearing tape can operate with speed up to 2.5 m/s [500 fpm].

# 4.6 pU Factor

The pU factor, which is the product of specific load (pressure) times surface velocity, is used as a guide in determining the useful life of plain bearings and is also an indication of heat generated within the bearing contact zone. The maximum pU factors listed in Table 2 are based on high-load and low-speed applications. The calculated unit load p, relative surface velocity U and operating temperature must be used along with the pU factor when selecting a bearing product for a given application. These values are then compared against published maximum recommended values for load, speed, temperature and pU for the bearing product. For an application to be successful, each of the application values must not exceed the published maximum recommended values. To complete the bearing analysis, bearing life should be estimated using the method given in section 5.5

# 4.7 Operating Clearances

Proper running clearance is a critical factor in bearing performance. In low speed oscillating pivot applications, the minimum possible recommended clearance can be as small as 0.013 mm [0.0005 inch] for fiber reinforced composite bearings. The shaft or pin will fit nearly line-to-line during the assembly process. However, since little or no heat is generated during very slow oscillating operation, additional clearance is not required.

For more dynamic applications involving continuous rotation at higher speeds or elevated ambient temperatures, minimum clearances may be as high as 0.005 mm/mm [0.005 inch/inch] of diameter.

GAR-MAX®, HSG, MLG, and HPM bearings cannot be sized or machined on their ID due to the liner composition. However, HPMB®, GAR-FIL® and HPF® bearings can be sized or machined for close tolerance control.

HPMB® bearings can be machined on the inner diameter to the depth up to 1 mm [0.040 inch] on diameter in standard configuration, and to the depth up to 3 mm [0.118 inch] on diameter upon request.

Standard GAR-FIL® and HPF® bearings are supplied with a 0.38 mm [0.015 inch] thick proprietary filled-PTFE tape liner that can be bored at assembly if necessary. GAR-FIL® and HPF® bearings can also be furnished with a thicker liner that allows for a greater depth for boring. For further information, contact GGB.

# 4.8 Dimensional Considerations

Before designing a special GGB fiber reinforced composite bearing, there are several important considerations to keep in mind:

## Wall Thickness

Bearings with wall thicknesses less than 2.5 mm [0.100 inch] should be avoided since thin-walled bearings have reduced load capacity, approximately 50% less than our rated load capacity for GGB fiber reinforced composite bearings.

The minimum recommended wall thickness is 1.5 mm [0.060 inch]. Wall thicknesses greater than 6.35 mm [0.250 inch] do not increase load capacity.

## Clearance

As noted previously, the minimum running clearance applies only to low speed applications operating at ambient temperatures.

For GAR-FIL® and HPF® bearings operating at surface speeds greater than 0.25 m/s [50 fpm] or at elevated temperatures, additional clearance may be required.

## Bearing Length

In designing bearings, the shaft diameter is usually determined by the need for physical stability or stiffness; therefore, only the bearing length must be determined based upon operating pressure and required life.

A short bearing should be limited to a length-to-diameter ratio of 0.25 as a minimum to insure sufficient retention in the housing.

A long bearing is not recommended because of potential shaft deflection and misalignment problems as described in Section 6.0. A long heavily loaded bearing will have disproportionately high specific loading at each end due to shaft deflection. For this reason, we do not recommend length-to-diameter ratios greater than 2.0.

## 4.9 Shaft Material and Surface Finish

Being part of the complete assembly, an appropriate design of the shaft is of the most utmost importance to obtaining the correct operating performance of the bearing. Most steel alloys are acceptable as shaft materials. Hardened steel shafts offer better performance in high load applications or in the presence of abrasive contaminants by providing greater protection for the mating surface.

When bearing operating pressures exceed a value of about 14 N/mm$^2$ [2,000 psi], minimum shaft hardness should be at least Brinnel 480 HB [Rockwell C50]. Fully hardened shafts are usually not necessary.

GGB fiber reinforced composite bearings offer good embeddibility in the presence of contaminants; however, we strongly recommend the use of seals.

Hardened stainless steel or hard chrome plating is recommended when corrosion resistance is required.

Equally important as material selection is shaft surface finish. A surface finish between 0.15 to 0.40 µm [6 to 16 µinches] will insure the most effective bearing performance by assuring maximum bearing wear resistance and lowest coefficient of friction. Rougher surface finishes can be used but there will be a reduction in bearing life. This is due to the rough shaft abrading the relatively soft polymer liner of the bearings.

We recommend that the ends of the shaft have chamfers or rounded edges to facilitate assembly and minimize the chance of scoring the bearing.

## 4.10 Housing Material

The running clearances given in section 8 for standard GGB fiber reinforced composite bearings are based upon installation in rigid steel or cast iron housings at normal ambient temperature. If the housing is made from non-ferrous alloys, such as aluminum, and will be subjected to elevated operating temperatures, there will be a potential for reduced bearing retention due to the thermal expansion of the housing.

In applications where non-ferrous alloy housings are to be used at elevated temperatures, the interference between the bearing and housing bore may have to be increased to assure adequate retention of the bearing in the housing. To prevent shaft interference at assembly, the shaft diameter must be equally reduced to compensate for the additional interference it. For further information contact GGB.

## 4.11 Lubrication

GGB fiber reinforced composite bearings are recommended to be used dry. However, grease can be used to protect and/or to purge the bearing zone of corrosion or contaminants. In applications where high cyclic vibrations are present, hydrostatic erosion of liner fibers by the grease may occur over long periods of time. This should be monitored to assure liner integrity over the operating life of the equipment.

GAR-FIL® and HPF® bearings can be used when submerged in oil or other lubricating liquids. Liquidous lubricants will reduce the coefficient of friction and bearing wear. However, the lubricant must be constantly maintained and kept free of abrasive contaminants. Grease is not recommended for GAR-FIL® and HPF® bearings.

HPMB®, HPM and HPF® bearings are specifically designed for hydropower applications where they can be used both dry and submerged in water. We recommend that hardened stainless steel shafting, such as 440 stainless steel, be used to minimize the chance of shaft corrosion.

GGB-MEGALIFE™ XT washers and sliding plates are typically used dry but can also be used in greased applications.

Multifil bearing tape can be used dry or with lubricants.

Liquid lubricants and greases attract contaminating particles that may migrate into the bearing. To minimize bearing contamination, the use of seals or wipers is highly recommended.

# 4.12 Multifil Bearing Tape Design Features

Multifil tape is a superior sliding bearing product developed specifically for machine tool ways, gibs, and other sliding applications. This unique product is a blend of virgin PTFE and a combination of fillers which vastly improve the bearing properties of the base resin.

This bearing tape is widely used by machine tool rebuilders and in-plant personnel to restore existing equipment to like new precision, as well as by many leading machine tool manufacturers. The tape is easy to apply to any clean rigid substrate, inexpensive and provides remarkable performance.

As a sliding bearing product, Multifil tape is unequalled for providing high compressive strength and load carrying capabilities, low friction, precise positioning accuracy and minimal wear – with or without lubrication.

In addition to its rapid, easy installation and economy, the use of Multifil tape eliminates stick-slip, chattering, scuffing, galling due to lubricant breakdown, scoring, uneven wear and override. It reduces or eliminates the need for lubrication, assures improved positioning accuracy and provides almost indefinite service life in most machine tool applications.

Typical applications include milling machines, planers, grinders, vertical boring machines and many more. This tape is particularly recommended for numerically-controlled machines where positioning accuracy and reproducibility are especially critical.

Multifil bearing tape is the ideal replacement for ways of hardened steel, bronze and other metals, hydrostatic supports systems, ball or roller bearings and all other types of bearing tape.

## Design Features

### Low Friction

Multifil tape provides smooth motion without stick-slip due to its similar values for static and dynamic friction. Tests of machine tools at pressures below 345 kN/m$^2$ [50 psi] have shown that filled PTFE can provide a coefficient of friction as low at 0.07 when operated dry. These tests also show that with lubrication, even lower frictional values down to 0.05 can be achieved without causing table override or any loss of positioning accuracy. Increased surface pressures will further improve these values.

### Wear

Without lubrication, Multifil bearing tape has the remarkably low wear rate of less than 0.127 mm/1,000 hrs. [0.005 in./1,000 hrs.] at pU values up to 0.35 N/mm$^2$ x m/s [10,000 psi x fpm]. The low pU's experienced in machine tool service cause very little wear. In lubricated service, actual field tests have proved that wear of Multifil tape is negligible over extended periods of operation.

### Compressive Strength

The excellent compressive strength of Multifil - only 1% deformation at 7,000 kN/m$^2$ [1,000 psi] – provides high load carrying capabilities. Multifil tape can operate at pU's in excess of 0.35 N/mm$^2$ x m/s [10,000 psi x fpm] particularly with lubrication. For optimum performance, pU levels below 0.18 N/mm$^2$ x m/s [5,000 psi x fpm] and adequate lubrication are normally recommended. At surface velocities of less than 0.005 m/s [1 fpm] or near static conditions, the rated allowable pressure is 69 N/mm$^2$ [10,000 psi] when the tape is bonded. Multifil's other outstanding physical properties are given in the table on page 11.

### Available Sizes

To meet the great majority of machine tool applications, Multifil bearing tape is available in standard thicknesses of 0.38 mm [0.015"], 0.76 mm [0.030"], 1.14 mm [0.045"], 1.52 mm [0.060"], 2.29 mm [0.090"], and 3.18 mm [0.125"], in standard widths of 305 mm [12"] and 610 mm [24"], and lengths up to 30 m [100'].

## Rapid, Easy Installation

Multifil tape can be applied to any properly prepared machine surface using a good quality industrial epoxy adhesive. Adhesive bonding eliminates the need for holes and fastening devices, improves the fatigue life of the surface material and permits the use of lighter gage materials for maximum economy.

### Surface Preparation

The surface to which the tape will be applied must be clean. To remove oxidation and other contamination, various cleaning methods can be used, including sanding, grinding, sandblasting or acid etching. Milled surfaces should be grit blasted prior to bonding. Ra surface finish 0.8 - 3.2 µm [32 - 125 µinch] is recommended for proper bonding. The surface should then be thoroughly degreased with a suitable oil-free solvent in a well-ventilated area and wiped clean with a dry, lint-free cloth. An air gun can be used to accelerate drying of the clean surface.

### Preparing the Tape

The tape can be easily cut to the desired length and width with a utility knife. The tape is chemically etched on one side to assure optimum bonding. To positively identify the bondable side, simply apply water to both sides. The water will bead up on the bearing side, while the bonding side will appear wet. Care should be taken to keep the bonding side of the tape clean since any foreign material, including moisture, finger marks, grease or oil will prevent a perfect bond.

### Preparing the Adhesive

A good two-part, room-temperature cure epoxy adhesive should be used to provide high shear strength. The adhesive should be prepared according to the manufacturer's instructions prior to application. Adequate eye and hand protection are recommended when working with any epoxy.

If the bonded bearing tape will be subsequently subjected to chlorinated oils and cutting fluids, then a chlorine resistant epoxy cured to suit manufacturer's instructions should be used.

### Applying the Adhesive and Tape

A thin, even coat of adhesive should be applied to both the tape and the machine surface. The total glue line should be approximately 5-6 mils after assembly. Edge locators (Figure 6) should be used to prevent the tape from sliding out of position. C-clamps or other devices that cause uneven pressure should not be used.

After carefully positioning, the tape should be covered with a rigid flat pressure plate, with additional weights evenly distributed to provide loading of 14-35 kN/m$^2$ [2-5 psi]. The use of grease-proof release paper to prevent cleanup problems is also recommended.

### Final Sizing

After the adhesive is cured (usually overnight), the bearing tape can be easily machined, ground or hand-scraped to the dimensional tolerances required by the specific application. For grinding large areas, a coolant – preferably a water soluble, oil emulsion grinding fluid, diluted 100:1 – should be used.

Lubrication grooves can also be machined into the tape. The depth of these grooves should be less than the thickness of the tape to prevent peeling and avoid problems in the event of repair or replacement. The final machining operation compensates for variations in the tolerance of the machine surface and the thickness of the tape and bond line.

### Mating Surfaces

For optimum performance, the surface finish of the mating material should not exceed 20 AA. Steel is generally used. If cast iron is used, a finer finish (10 AA) is recommended due to the open surface texture of this material. While mating surface hardness is not a requirement except in abrasive atmospheres, good surface finish is important. A surface that is too rough will accelerate wear and cause excessive friction.

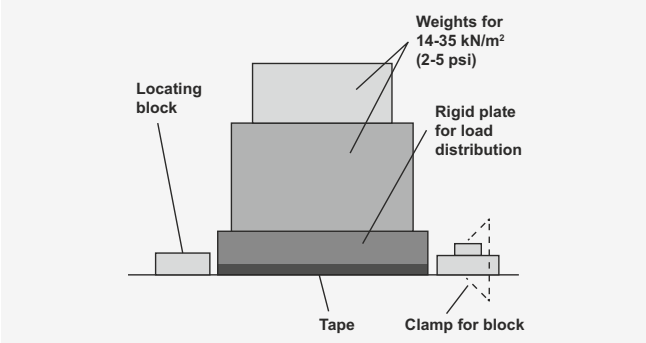


*Fig.6: Application of Multifil bearing tape*

# 5.0 Performance

The following section describes how to estimate bearing life for GGB fiber reinforced composite bearings. This method involves calculation of the pU factor which is then further modified by application factors for unit loading, bearing length, operating temperature, mating surface and bearing diameter. If you need additional assistance in estimating bearing life, feel free to contact GGB.

## 5.1 Design Factors

The main parameters when determining the size or estimating the service life for a GGB fiber reinforced composite bearing are:

- Specific load limit, $p_{lim}$
- pU factor
- Length-to-diameter ratio
- Mating surface finish
- Mating surface material
- Temperature
- Other environmental factors, e.g., housing design, dirt, lubrication

## 5.2 Specific Load, p

The formula for calculating the specific load, p, for bearings is:

Bearings

(5.2.1) [N/mm²] or [psi]

$$p = \frac{F}{D_i \cdot B}$$

| WHERE | |
|---|---|
| p | Specific load, [N/mm²] or [psi] |
| F | Applied load, [Newtons] or [pounds] |
| $D_i$ | Bearing nominal ID, [mm] or [inches] |
| B | Bearing length, [mm] or [inches] |

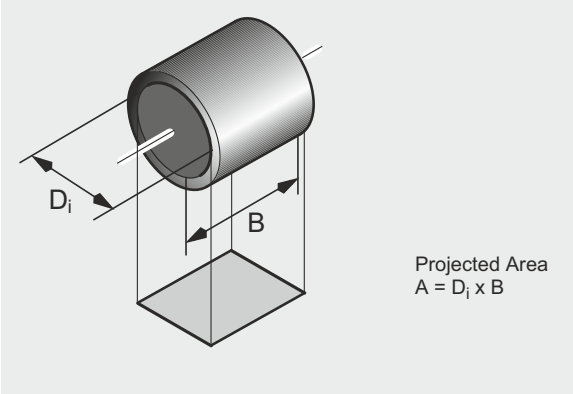


*Fig. 7: Projected area for bearing*

# 5.3 Sliding Speed, U

The formula for calculating sliding speed are:

Bearings

(5.3.1) [m/s]

$$U = \frac{D_i \cdot \pi \cdot n}{60 \cdot 10^3}$$

(5.3.2) [ft/min]

$$U = \frac{D_i \cdot \pi \cdot n}{12}$$

| WHERE | |
|---|---|
| U | Sliding speed, [m/s] or [fpm] |
| n | Rotational speed, [1/min] |

For oscillating applications

(5.3.3) [1/min]

$$n = \frac{4 \cdot \varphi \cdot n_{osc}}{360}$$

| WHERE | |
|---|---|
| $n_{osc}$ | Oscillating movement frequency, [1/min] |
| $\varphi$ | Angular displacement, [°] |

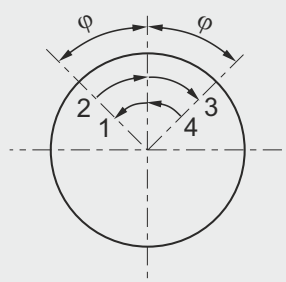


*Fig 8: Oscillating cycle, φ*

# 5.4 pU Factor

The useful life of a GGB fiber reinforced composite bearing is governed by the pU factor, the product of the specific load, p, and the sliding speed, U, as defined in 5.2 and 5.3 respectively.
The formula for calculating pU is:

(5.4.1) [N/mm² x m/s] or [psi x fpm]

$$pU = p \cdot U$$

# 5.5 Estimating Bearing Life

## Cyclic Bearing Life, $L_Q$

The cyclic bearing life of a GGB fiber reinforced composite bearing is estimated by using the following formula:

GAR-MAX® HPMB® and HSG

(5.5.1) [cycles]

$$L_Q = \frac{Q_{GM}}{pv} \cdot a_E \cdot a_T \cdot a_M \cdot a_S \cdot a_B$$

MLG™

(5.5.2) [cycles]

$$L_Q = \frac{Q_{MLG}}{pv} \cdot a_E \cdot a_T \cdot a_M \cdot a_S \cdot a_B$$

GAR-FIL™

(5.5.3) [cycles]

$$L_Q = \frac{Q_{GF}}{pv} \cdot a_E \cdot a_T \cdot a_M \cdot a_S \cdot a_B$$

| WHERE | |
|---|---|
| $L_Q$ | Estimated bearing life, [cycles] |
| $Q_{GF}$ | GAR-FIL® cyclic life factor, see Table 6 |
| $Q_{GM}$ | GAR-MAX®, HPMB® and HSG cyclic life factor, see Table 6 |
| $Q_{MLG}$ | MLG cyclic life factor, see Table 6 |
| pU | pU factor, p×U, [N/mm² x m/s] or [psi x fpm] |
| $a_E$ | High load factor |
| $a_T$ | Temperature factor |
| $a_M$ | Mating surface factor |
| $a_S$ | Surface finish factor |
| $a_B$ | Bearing size factor |

| Product | Factor | Cyclic Life Factors | |
|---|---|---|---|
| | | N/mm² x m/s | psi x fpm |
| GAR-MAX® | $Q_{GM}$ | $3.8 \times 10^6$ | $11.0 \times 10^{10}$ |
| HSG | $Q_{GM}$ | $3.8 \times 10^6$ | $11.0 \times 10^{10}$ |
| HPMB® | $Q_{GM}$ | $3.8 \times 10^6$ | $11.0 \times 10^{10}$ |
| MLG | $Q_{MLG}$ | $1.4 \times 10^6$ | $4.0 \times 10^{10}$ |
| GAR-FIL® | $Q_{GF}$ | $2.4 \times 10^6$ | $7.0 \times 10^{10}$ |

*Table 6: Cyclic Life Factors*

## High Load Factor, a

The high load factor considers both the effect of the specific load and the bearing's $B/D_i$ (length-to-diameter) ratio. Table 7 shows the specific load limit, $P_{lim}$ for various operating conditions. Fig. 8 shows a graph of the length factor, $a_B/D_i$, versus $B/D_i$. Once the values for $P_{lim}$ and $a_B/D_i$ are selected, the high load factor, $a_E$, can be calculated as shown. If the calculated $a_E$ value is negative, then the designer must consider a larger bearing in order to reduce the specific load, P.

(5.5.4)

$$a_E = \left(\frac{p_{lim} - p}{p_{lim}}\right)^{a_{B/D_i}}$$

| WHERE | |
|---|---|
| $p_{lim}$ | Specific load limit, see Table 7, [N/mm²] or [psi] |
| p | Specific load, [N/mm²] or [psi] |
| $a_{B/D_i}$ | $B/D_i$ factor taken from Fig. 9 |

| Type of loading | Units | Specific Load Limit $p_{lim}$ | |
|---|---|---|---|
| | | GAR-MAX®, HSG, HPMB®, MLG | GAR-FIL® |
| Steady unidirectional loads relative to the bearing surface with rotation in one direction only. | MPa | 138 | 138 |
| | psi | 20,000 | 20,000 |
| Steady unidirectional loads with oscillating motion. | MPa | 138 | 138 |
| | psi | 20,000 | 20,000 |
| Dynamic loads, alternating or fluctuating, with rotating or oscillating motion. | MPa | 103 | 103 |
| | psi | 15,000 | 15,000 |
| Rotating load relative to bearing surface, e.g., fully rotational bearing on stationary shaft. | MPa | 55 (U < 0.025 m/s) | 14 (U < 0.125 m/s) |
| | psi | 8,000 (< 5 fpm) | 2,000 (< 25 fpm) |

*Table 7: Specific load limit, $p_{lim}$*

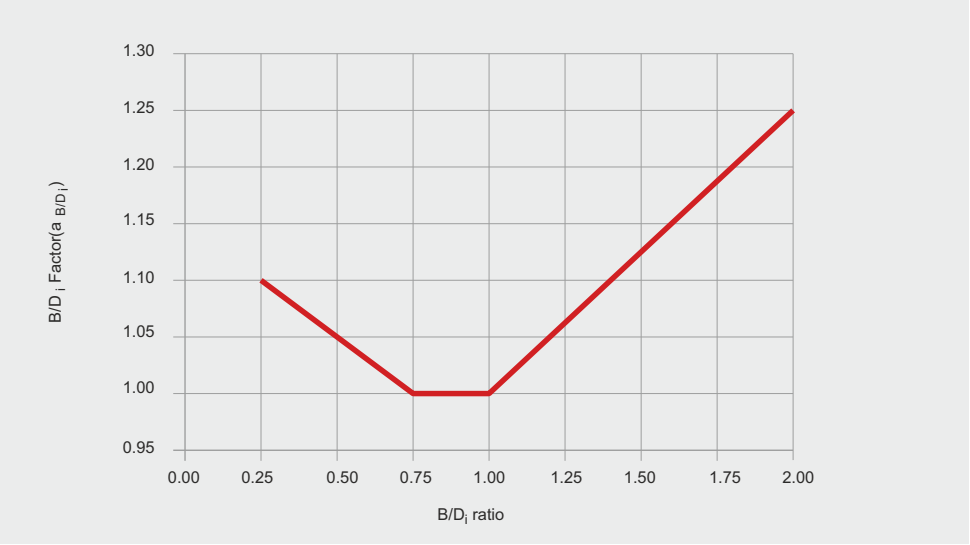


*Fig. 9: $B/D_i$ factor $a_{B/D_i}$*

## Type of Load

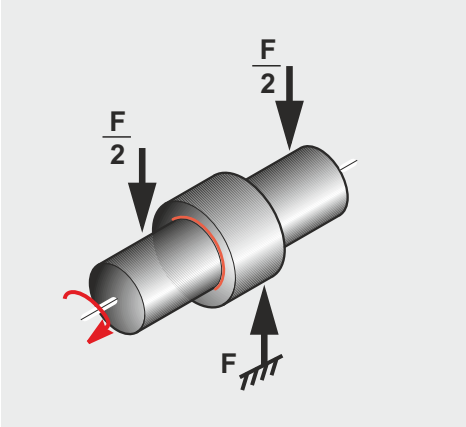


*Fig. 10: Steady load, bush stationary, shaft rotating*

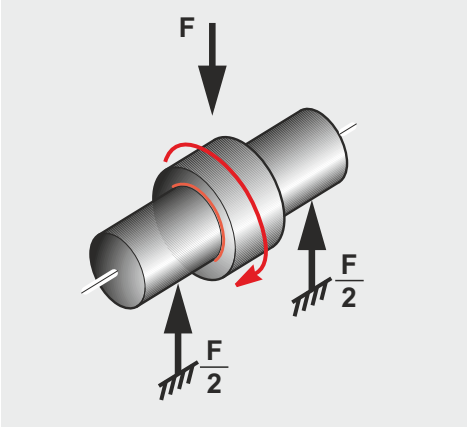


*Fig. 11: Rotating load, shaft stationary, bush rotating*

## Temperature Factor - $a_T$

The effect of environmental temperature on the bearing life is given in Fig. 12. Elevated temperatures tend to soften the non-metallic bearing surface resulting in reduced wear resistance and load capacity. Since the bearing surface of GAR-FIL® consists of a proprietary filled PTFE material, bearing life will be influenced by temperature to a greater degree than GAR-MAX®, HSG, HPMB® and MLG. When the operating temperature approaches the top limit of 205 °C [400 °F] for GAR-FIL® or 163 °C [325 °F] for GAR-MAX®, HSG, HPMB® and MLG, please contact GGB.

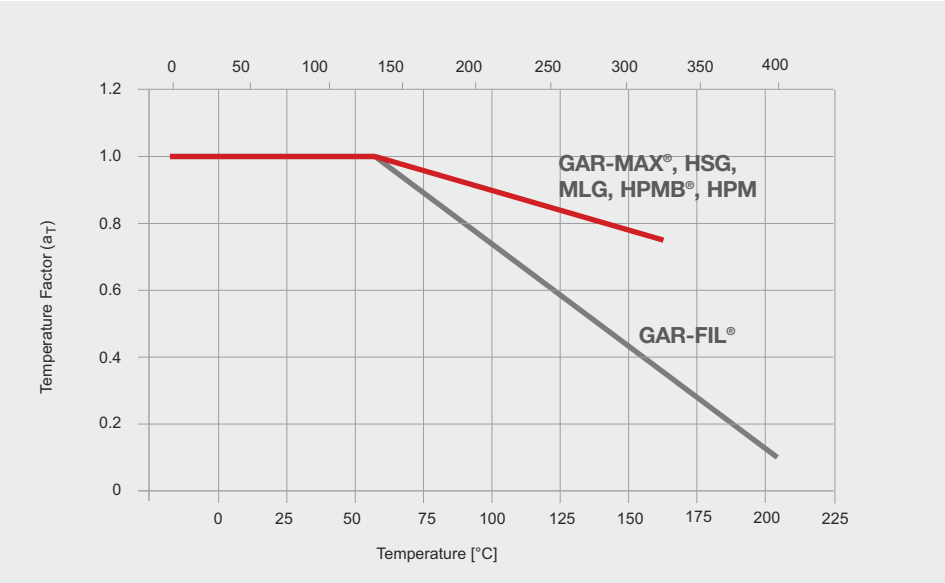


*Fig. 12: Temperature factor $a_T$*

| Material | Mating Surface Factor $a_M$ |
|---|---|
| **Steels** | |
| Case-hardened Steel | 1 |
| Mild Steel | 1 |
| Nitrided Steel | 1 |
| Hardened Stainless Steel | 1.2 |
| **Non-Ferrous Metals** | |
| Bronze & Copper Based Alloys | 0.1-0.4 |
| Hard Anodized Aluminium, 0.025 mm (0.001 inch) thick | 1.5 |
| **Plated Steel, 0.013 mm (0.0005 inch) minimum plating thickness** | |
| Hard Chrome (polished after plating) | 1.2 |
| Tin Nickel | 1.2 |
| Tungsten Carbide Flame Plated | 1.5 |
| Zinc (Galvanized) | 0.2 |

*Table 8: Mating surface factor, $a_M$*

## Mating Material Factor - $a_M$

The effect of shaft material on self-lubricating bearing life is reflected in Table 8 which lists the mating surface material factors, $a_M$, for many commonly used shaft materials and shaft finishes. When plated shafting is to be used, designers should specify that the plating possesses adequate strength and adhesion.

## Mating Surface Factor - $a_S$

Shaft surface finish is a very important consideration when estimating bearing life. Fig. 13 shows a relationship of the mating surface factor, $a_S$, with respect to surface finish in micrometers [microinches]. To maximize bearing life, a Ra surface finish of 0.15 to 0.40 µm [6 to 16 µinch] is recommended. Rougher surface finishes will result in reduced bearing life because they will tend to rake through the soft polymer liners and accelerate wear. On the other hand, very fine finishes do not permit the adequate transfer of the self-lubricating material onto the shaft surface and will also tend to reduce bearing life in dry applications. If rougher finishes are to be considered, testing should be conducted based on dynamics and operating pressures for the application.

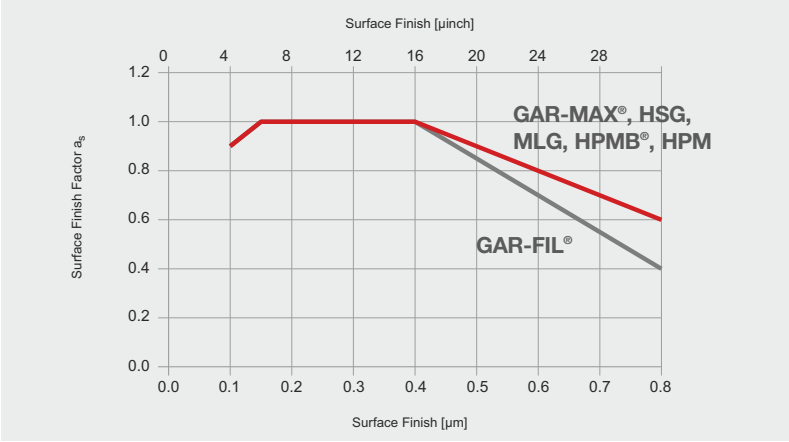


*Fig. 13: Mating Surface Factor $a_S$*

## Bearing Size Factor - $a_B$

As the bearing size increases there is a relatively smaller angular contact area after initial bedding-in occurs. This reduction in contact area has the effect of increasing the actual unit loading and consequently will result in reducing bearing life. The bearing size factor $a_B$ versus shaft diameter is plotted in Fig.14.

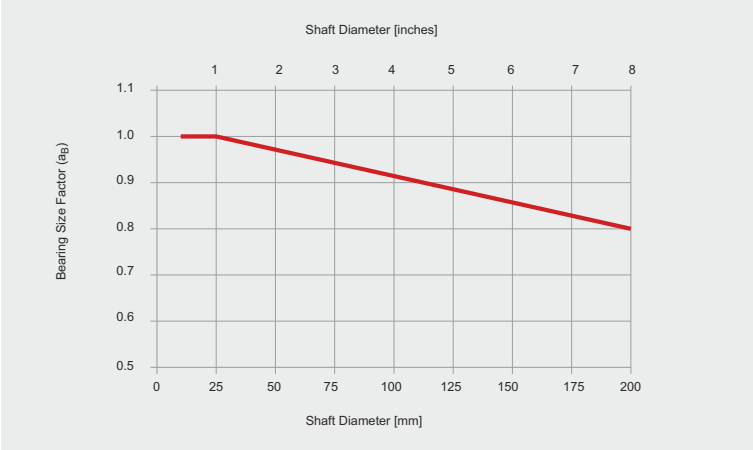


*Fig. 14: Bearing Size Factor $a_B$*

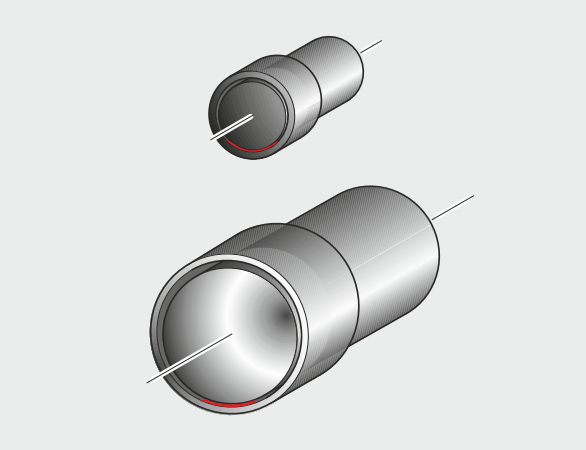

*Fig. 15: Contact area between bearing and shaft*

# 5.6 Worked Examples

## GAR-MAX®

| Given | | | | |
|---|---|---|---|---|
| Load Details | Steady Load | Inside Diameter, D | 2.25 inch | $\frac{B}{D_i} = \frac{2.00}{2.25} = 0.89$ |
| | Shaft oscillating | Length, B | 2.00 inch | |
| Shaft | Hardened Steel, $R_a$ = 20 µinch | BearingLoad,F | 60,000 pounds | |
| Environment | Ambient Temperature = 72 °F | Frequency,$n_{osc}$ | 15 cycles/min | |
| | | Amplitude,φ | 20° | |

| Calculation Constants and Application Factors | | |
|---|---|---|
| Specific Load Limit, p | 20,000psi | (Table 7, Page 28) |
| $B/D_i$ Factor, $a_{B/Di}$ | 1.0 | (Fig. 9, Page 28) |
| Temperature Factor, $a_T$ | 1.0 | (Fig. 12, Page 29) |
| Mating Material Factor, $a_M$ | 1.0 | (Table 8, Page 29) |
| Mating Surface Factor, $a_S$ | 0.9 | (Fig. 13, Page 30) |
| Bearing Size Factor, $a_B$ | 0.96 | (Fig. 14, Page 30) |
| Cyclic Life Factor, $Q_{GM}$ | $11 \cdot 10^{10}$ psi x fpm | (Table 6, Page 27) |

| Calculation | Reference | Value |
|---|---|---|
| Specific Load, p [N/mm²] or [psi] | (5.2.1), Page 25 | $p = \frac{F}{D_i \cdot B} = \frac{60{,}000}{2.25 \cdot 2.00} = 13{,}333 \text{ psi}$ |
| Sliding Speed, U [m/s] or [fpm] | (5.3.1), Page 26 | $U = \frac{D_i \cdot \pi \cdot n}{12} = \frac{2.25 \cdot \pi \cdot 3.333}{12} = 1.96 \text{ fpm}$ $\quad n = \frac{4 \cdot \varphi \cdot n_{osc}}{360} = 3.333 \text{ rpm}$ |
| pU Factor, pU [N/mm² x m/s] or [psi x fpm] | (5.4.1), Page 26 | $pU = p \cdot U = 13{,}333 \cdot 1.96 = 26{,}133 \text{ psi} \cdot \text{fpm}$ |
| High Load Factor, $a_E$ | (5.5.4), Page 27 | $a_E = \left(\frac{p_{lim} - p}{p_{lim}}\right)^{a_{B/D_i}} = \left(\frac{20{,}000 - 13{,}333}{20{,}000}\right)^{1.25} = 0.333$ |
| Life, $L_Q$ [cycles] | (5.5.1), Page 27 | $L_Q = \frac{Q_{GM}}{pU} \cdot a_E \cdot a_T \cdot a_M \cdot a_S \cdot a_B = \frac{11 \cdot 10^{10}}{26{,}133} \cdot 0.333 \cdot 1.0 \cdot 1.0 \cdot 0.9 \cdot 0.96 = 1.2 \cdot 10^6 \text{ cycles}$ |

## GAR-FIL®

| Given | | | | |
|---|---|---|---|---|
| Load Details | Steady Load | Inside Diameter, D | 40 mm | $\frac{B}{D_i} = \frac{20}{40} = 0.5$ |
| | Shaft oscillating | Length, B | 20 mm | |
| Shaft | Hardened Steel, $R_a$ = 0.2µm | Bearing Load, F | 50,000 Newtons | |
| Environment | Ambient Temperature = 75 °C | Frequency, $n_{osc}$ | 10 cycles/min | |
| | | Amplitude, φ | 30° | |

| Calculation Constants and Application Factors | | |
|---|---|---|
| Specific Load Limit, p | 138 N/mm² | (Table 7, Page 27) |
| $B/D_i$ Factor, $a_{B/Di}$ | 1.05 | (Fig. 9, Page 28) |
| Temperature Factor, $a_T$ | 0.9 | (Fig. 12, Page 29) |
| Mating Material Factor, $a_M$ | 1.2 | (Table 8, Page 29) |
| Mating Surface Factor, $a_S$ | 1.0 | (Fig. 13, Page 30) |
| Bearing Size Factor, $a_B$ | 0.98 | (Fig. 14, Page 30) |
| Cyclic Life Factor, $Q_{GF}$ | $2.4 \cdot 10^6$ N/mm² · m/s | (Table 6, Page 27) |

| Calculation | Reference | Value |
|---|---|---|
| Specific Load, p [N/mm²] or [psi] | (5.2.1), Page 25 | $p = \frac{F}{D_i \cdot B} = \frac{50{,}000}{40 \cdot 20} = 62.5 \text{ N/mm}^2$ |
| Sliding Speed, U [m/s] or [fpm] | (5.3.1), Page 26 | $U = \frac{D_i \cdot \pi \cdot n}{60 \cdot 10^3} = \frac{40 \cdot \pi \cdot 3.333}{60 \cdot 10^3} = 0.007 \text{ m/s}$ $\quad n = \frac{4 \cdot \varphi \cdot n_{osc}}{360} = 3.333 \text{m/s}$ |
| pU Factor, pU [N/mm²·m/s] or [psi·fpm] | (5.4.1), Page 26 | $pU = p \cdot U = 62{,}5 \cdot 0.007 = 0.438 \text{ N/mm}^2 \cdot \text{m/s} \cdot \text{fpm}$ |
| High Load Factor, $a_E$ | (5.5.4), Page 27 | $a_E = \left(\frac{p_{lim} - p}{p_{lim}}\right)^{a_{B/D_i}} = \left(\frac{138 - 62{,}5}{138}\right)^{1.05} = 0.531$ |
| Life, $L_Q$ [cycles] | (5.5.1), Page27 | $L_Q = \frac{Q_{GF}}{pU} \cdot a_E \cdot a_T \cdot a_M \cdot a_S \cdot a_B = \frac{2{,}4 \cdot 10^6}{0.438} \cdot 0.531 \cdot 0.9 \cdot 1.2 \cdot 1.0 \cdot 0.98 = 3.1 \cdot 10^6 \text{ cycles}$ |

## HPMB®

| Given | | | | |
|---|---|---|---|---|
| Load Details | Dynamic Loads | Inside Diameter, $D_i$ | 150 mm | $\frac{B}{D_i} = \frac{100}{150} = 0.67$ |
| | Shaft oscillating | Length, B | 100 mm | |
| Shaft | Hardened Steel, $R_a$ = 0.4 µm | Bearing Load, F | 800 KN | |
| Environment | Ambient Temperature = 22 °C | Frequency, $n_{osc}$ | 6 cycles/min | |
| | | Amplitude, φ | 15° | |

| Calculation Constants and Application Factors | | |
|---|---|---|
| Specific Load Limit, p | 103 N/mm² | (Table 7, Page 28) |
| $B/D_i$ Factor, $a_{B/Di}$ | 1.02 | (Fig. 9, Page 28) |
| Temperature Factor, $a_T$ | 1.0 | (Fig. 12, Page 29) |
| Mating Material Factor, $a_M$ | 1.0 | (Table 8, Page 29) |
| Mating Surface Factor, $a_S$ | 1.0 | (Fig. 13, Page 30) |
| Bearing Size Factor, $a_B$ | 0.85 | (Fig. 14, Page 30) |
| Cyclic Life Factor, $Q_{GM}$ | 3.8 x $10^6$ N/mm² x m/s | (Table 6, Page 27) |

| Calculation | Reference | Value |
|---|---|---|
| Specific Load, p [N/mm²] or [psi] | (5.2.1), Page 25 | $p = \frac{F}{D_i \cdot B} = \frac{800{,}000}{150 \cdot 100} = 53\ N/mm^2$ |
| Sliding Speed, U [m/s] or [fpm] | (5.3.1), Page 26 | $U = \frac{D_i \cdot \pi \cdot n}{12} = \frac{150 \cdot \pi \cdot 1}{60 \cdot 10^3} = 0.0078\ m/s$ $\quad n = \frac{4 \cdot \varphi \cdot n_{osc}}{360} = 1\ rpm$ |
| pU Factor, pU [N/mm²·m/s] or [psi·fpm] | (5.4.1), Page 26 | $pU = p \cdot U = 53 \cdot 0.0078 = 0.41\ N/mm^2 \cdot m/s$ |
| High Load Factor, $a_E$ | (5.5.4), Page 27 | $a_E = \left(\frac{p_{lim} - p}{p_{lim}}\right)^{a_{B/D_i}} = \left(\frac{103 - 53}{103}\right)^{1.02} = 0.478$ |
| Life, $L_Q$ [cycles] | (5.5.1), Page 27 | $L_Q = \frac{Q_{GM}}{pU} \cdot a_E \cdot a_T \cdot a_M \cdot a_S \cdot a_B = \frac{3.8 \cdot 10^6}{0.41} \cdot 0.478 \cdot 1.0 \cdot 1.0 \cdot 1.0 \cdot 0.85 = 3.7 \cdot 10^6$ cycles |

## MLG

| Given | | | | |
|---|---|---|---|---|
| Load Details | Steady Load | Inside Diameter, $D_i$ | 1.25 inch | $\frac{B}{D_i} = \frac{2.50}{1.25} = 2.0$ |
| | Shaft oscillating | Length, B | 2.50 inch | |
| Shaft | Mild Steel, $R_a$ = 32 µinch | Bearing Load, F | 40,000 pounds | |
| Environment | Ambient Temperature = 120 °F | Frequency, $n_{osc}$ | 20 cycles/min | |
| | | Amplitude, φ | 30° | |

| Calculation Constants and Application Factors | | |
|---|---|---|
| Specific Load Limit, p | 20,000 psi | (Table 7, Page 28) |
| $B/D_i$ Factor, $a_{B/Di}$ | 1.25 | (Fig. 12, Page 29) |
| Temperature Factor, $a_T$ | 1.0 | (Fig. 12, Page 29) |
| Mating Material Factor, $a_M$ | 1.0 | (Table 8, Page 29) |
| Mating Surface Factor, $a_S$ | 0.6 | (Fig. 13, Page 30) |
| Bearing Size Factor, $a_B$ | 0.99 | (Fig. 14, Page 30) |
| Cyclic Life Factor, $Q_{MLG}$ | $4 \cdot 10^{10}$ psi · fpm | (Table 6, Page 27) |

| Calculation | Reference | Value |
|---|---|---|
| Specific Load, p [N/mm²] or [psi] | (5.2.1), Page 25 | $p = \frac{F}{D_i \cdot B} = \frac{40{,}000}{1.25 \cdot 2.50} = 12{,}800 \text{ psi}$ |
| Sliding Speed, U [m/s] or [ft/min] | (5.3.1), Page 26 | $U = \frac{D_i \cdot \pi \cdot n}{12} = \frac{1.25 \cdot \pi \cdot 6.667}{12} = 2{,}182 \text{ psi}$ $\quad n = \frac{4 \cdot \varphi \cdot n_{osc}}{360} = 6.667 \text{ rpm}$ |
| pU Factor, pU [N/mm² · m/s] or [psi·fpm] | (5.4.1), Page 26 | $pU = p \cdot U = 12{,}800 \cdot 2.182 = 27{,}930 \text{psi} \cdot \text{fpm}$ |
| High Load Factor, $a_E$ | (5.5.4), Page 27 | $a_E = \left(\frac{p_{lim} - p}{p_{lim}}\right)^{a_{B/D_i}} = \left(\frac{20{,}000 - 12{,}800}{15{,}000}\right)^{1.25} = 0.279$ |
| Life, $L_Q$ [cycles] | (5.5.1), Page 27 | $L_Q = \frac{Q_{MLG}}{pU} \cdot a_E \cdot a_T \cdot a_M \cdot a_S \cdot a_B = \frac{4 \cdot 10^{10}}{27{,}930} \cdot 0.279 \cdot 1.0 \cdot 1.0 \cdot 0.6 \cdot 0.99 = 2.3 \cdot 10^5 \text{ cycles}$ |

# 6.0 Misalignment

Bearings operating with proper shaft alignment area uniformly loaded along their length as shown in Fig. 16. In the right side of Fig. 16 is a top view of the contact area. Shaft misalignment reduces the contact area and shifts the bearing pressure distribution to one end of the bearing, as illustrated in Fig. 17. With substantial misalignment the contact area reduces to a parabolic shape as shown in Fig. 18. The concentrated edge pressure due to the excessive misalignment can cause bearing failure. When the edge pressure products stresses that approach or exceed the compressive strength of the material, fracture may occur.

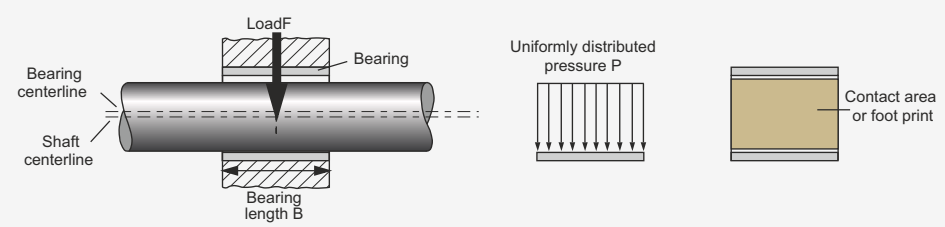


*Fig. 16: Properly aligned shaft*

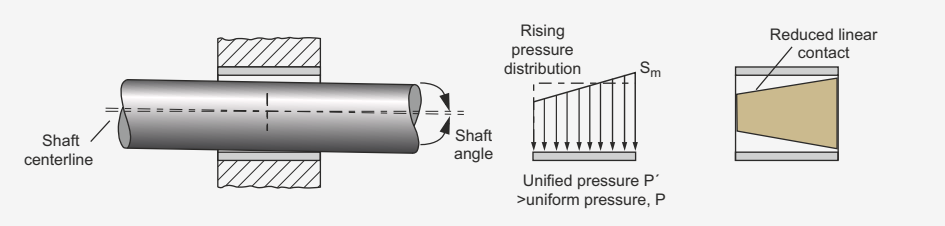


*Fig. 17: Slight misalignment*

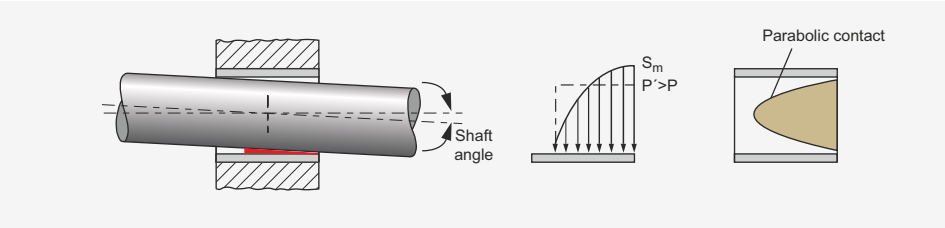


*Fig. 18: Substantial misalignment*

If it is known from experience that misalignment and/or shaft deflections are minimal, less than 0.2%, (0.002 mm/mm of length [0.002 inch/inch of length]), for highly loaded, very low speed applications, then the following misalignment considerations can be ignored.

Misalignment tests were conducted on GAR-MAX® bearings to determine the maximum edge stresses that may occur under varying amounts of misalignment. Fig. 19 and Fig. 20 show the relationship of the calculated edge stress, $S_m$, relative to the applied unit load, P, for two levels of misalignment (0.6% and 1.0%) and two length-to-diameter ratios ($B/D_i$ = 0.5 and $B/D_i$ = 1.0).

For static loading, or static combined with shock loading, if the edge stress, $S_m$, exceeds the acceptable maximum of 345 N/mm² [50,000 psi] for GAR-MAX®, HPMB® and MLG or 517 N/mm² [75,000 psi] for HSG, then a redesign of the bearing is required.

GAR-FIL® is not recommended for applications when significant misalignment is anticipated.

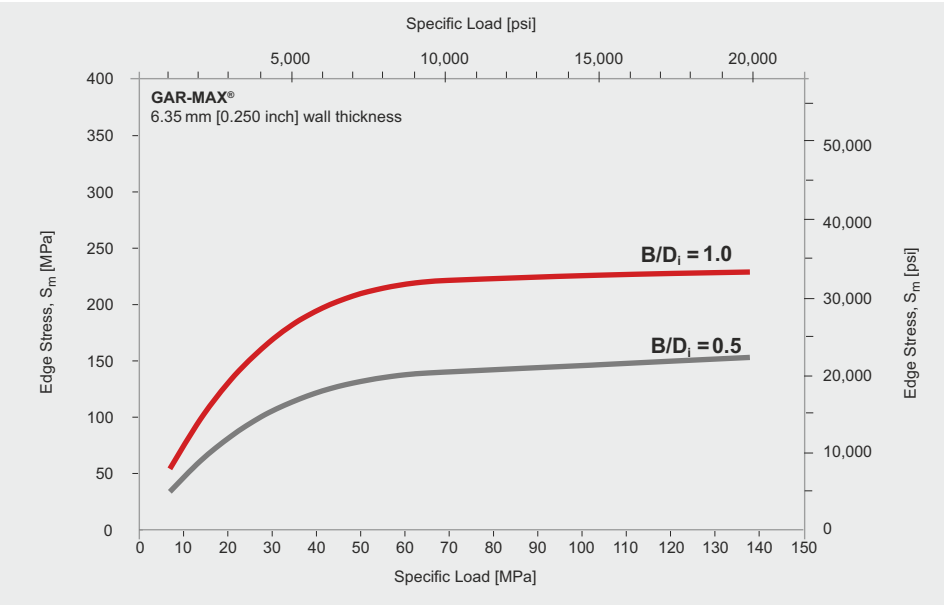


*Fig. 19: Edge Stress for 0.6%*

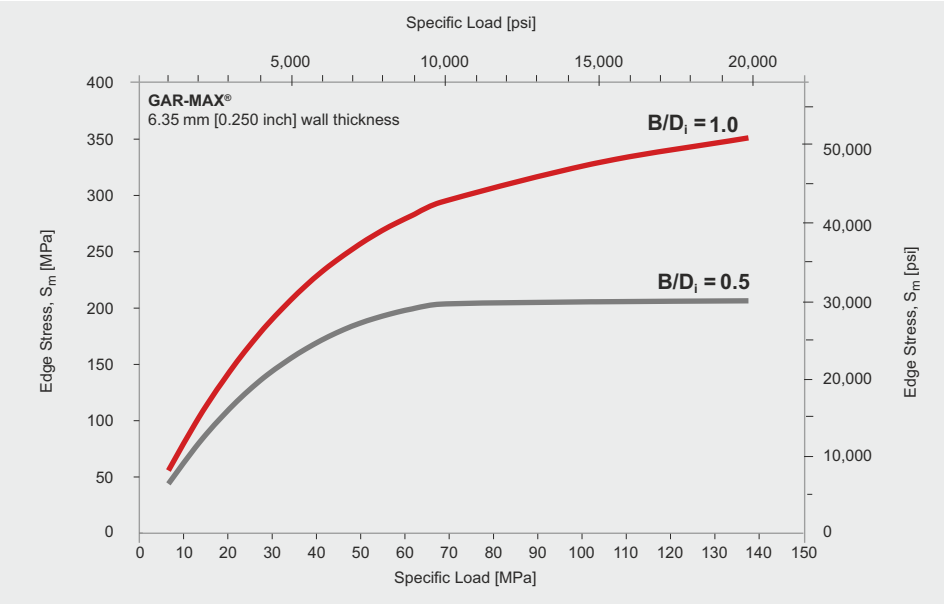


*Fig. 20: Edge Stress for 1.0%*

# 7.0 Installation and Machining

## 7.1 Installation

The retention of GGB fiber reinforced composite bearings in metal housings is excellent due to the high material stiffness and a thermal expansion rate similar to steel. The press fits used for bronze bearings are adequate for fiber reinforced composite bearings in most cases. In general, fiber reinforced composite bearings can be directly mounted in housings designed for bronze bearings. The bearing will close in by an amount equal to the measure of interference with the housing. This close-in must be considered when calculating the installed bore and corresponding shaft diameter.

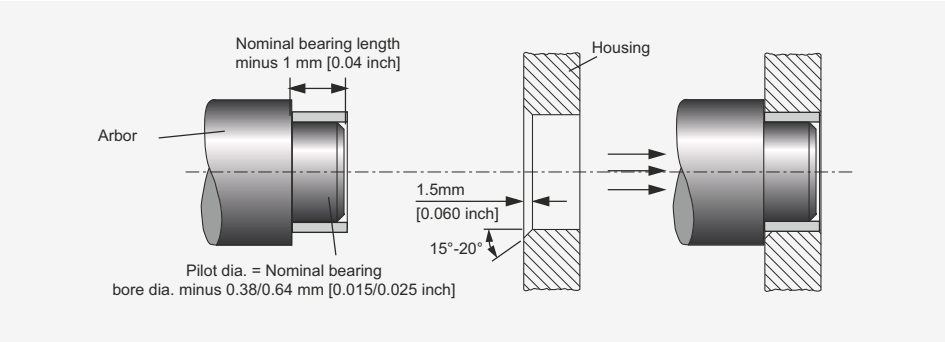


*Fig. 21: Fittings of bearings*

## 7.2 Machining of HPMB® Bearings

The HPMB® bearing's liner is easily machined with commonly available single-point tools. In standard form, maximum allowable machining depth is 1 mm [0.04 inch] (on diameter), which can be increased up to 3 mm [0.118 inches] (on diameter) by special request.

HPMB® may be machined in a single pass to the required final inside diameter and it shall be machined dry.

Documented machining parameters include carbide inserts with a cutting radius 3 - 10 mm [0.118 - 0.394 inches] to machine the liner with a surface speed of 1.25 – 3.5 m/s [0.049 - 0.138 inches] and a traverse speed of 0.13 mm [0.0005 inches] /revolution.

HPMB® bearings can be ID-machined either by GGB or the end user.

To obtain maximum bearing performance, it is strongly recommended that HPMB bearings operate only after being machined in the inner diameter. The minimum recommended machining depth is 0.2 mm [0.008 inches] on the diameter.

# 7.3 Fitting

## Length

Abrasive cut-of wheels produce the best results when cutting lengths of GGB fiber reinforced composite bearings.

When using a lathe to cut of lengths, we recommend using a carbide tool due to the abrasive nature of the fiberglass/epoxy outer shell.

Water mist or exhaust dust collectors should be used to minimize dust in the work area.

## Outer Diameter

Grinding is the preferred method of altering the outer diameter; however, carbide lathe tools can also be used.

## Inner Diameter

HPMB® bearing's liner is easily machined with a commonly available single point tools.

Please see Machining of HPMB® Bearings on page 37.

GAR-FIL® and HPF® bearings can be sized on the inner diameter. We recommend specifying 0.76 mm [0.030 inches] or thicker ape liner when ordering bearings that will be bored. When lathe boring a GAR-FIL® or HPF® bearing, you should first install the bearing into a rigid housing and bore using high speed and low feed rate. GAR-FIL® and HPF® bearings can also be reamed and broached.

## Deburring

Emery cloth is effective in removing burrs from the outer diameter of GGB fiber reinforced composite bearings.

To remove frayed fibers from the ID of GAR-MAX®, HSG, MLG, HPMB® and HPM bearings, a small hand held grinder is preferred.

The inner diameter of GAR-FIL® or HPF® bearings can be deburred by a sharp cutting tool or emery cloth.

## Drilling

Carbide drills should be used for drilling GGB fiber reinforced composite bearings.

When drilling GAR-MAX®, HSG, MLG, HPMB® and HPM bearings, the inner diameter must be supported with a mandrel, and a flat tipped drill or end mill should be used.

# 8.0 Standard Products

## 8.1 GAR-MAX®, GAR-FIL®, HSG, MLG (Inch Sizes)

1/8" wall series

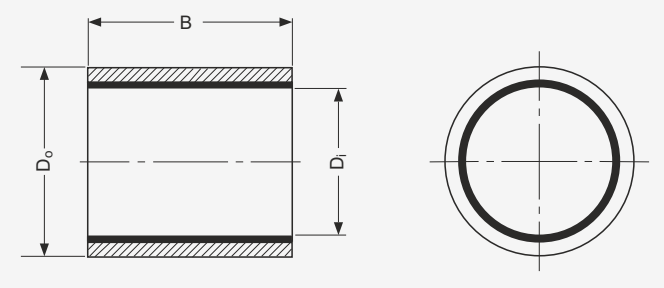


| Length tolerance table | | B | | |
|---|---|---|---|---|
| | | <3 inch | ≥3 to <6 inch | ≥6 inch |
| $D_i$ | <3 inch | ±0.010 inch | ±0.020 inch | ±0.030 inch |
| | ≥3 to<6 inch | ±0.020 inch | ±0.020 inch | ±0.030 inch |

To order, specify bearing product prefix and size number plus suffix for desired length (in multiples of 1/16").
e.g. GM2428-032 is a 1.5" ID x 1.75" OD x 2" long GAR-MAX® bearing.

| Bearing Part Number | Nominal Size ID x OD $D_i$ x $D_o$ | Bearing ID $D_i$ | Bearing OD $D_o$ | Recommended Sizes | | Running Clearance $C_D$ |
|---|---|---|---|---|---|---|
| GM, GF, HSG, MLG | | | | Shaft Dia. $D_J$ | Housing Dia. $D_H$ | |
| 0812-xxx | ½ x ¾ | 0.5040<br>0.5070 | 0.7535<br>0.7515 | 0.5000<br>0.4995 | 0.7500<br>0.7505 | 0.0005<br>0.0065 |
| 1014-xxx | 5/8 x 7/8 | 0.6290<br>0.6320 | 0.8785<br>0.8765 | 0.6250<br>0.6245 | 0.8750<br>0.8755 | 0.0005<br>0.0065 |
| 1216-xxx | ¾ x 1 | 0.7540<br>0.7570 | 1.0035<br>1.0015 | 0.7500<br>0.7495 | 1.0000<br>1.0005 | 0.0005<br>0.0065 |
| 1418-xxx | 7/8 x 1 1/8 | 0.8790<br>0.8820 | 1.1285<br>1.1265 | 0.8750<br>0.8745 | 1.1250<br>1.1255 | 0.0005<br>0.0065 |
| 1620-xxx | 1 x 1¼ | 1.0040<br>1.0070 | 1.2535<br>1.2515 | 1.0000<br>0.9995 | 1.2500<br>1.2505 | 0.0005<br>0.0065 |
| 1822-xxx | 1 1/8 x 1 3/8 | 1.1290<br>1.1320 | 1.3785<br>1.3765 | 1.1250<br>1.1245 | 1.3750<br>1.3755 | 0.0005<br>0.0065 |
| 2024-xxx | 1¼ x 1½ | 1.2540<br>1.2570 | 1.5035<br>1.5015 | 1.2500<br>1.2495 | 1.5000<br>1.5005 | 0.0005<br>0.0065 |
| 2226-xxx | 1 3/8 x 1 5/8 | 1.3790<br>1.3820 | 1.6285<br>1.6265 | 1.3750<br>1.3745 | 1.6250<br>1.6255 | 0.0005<br>0.0065 |
| 2428-xxx | 1½ x 1¾ | 1.5040<br>1.5070 | 1.7535<br>1.7515 | 1.5000<br>1.4995 | 1.7500<br>1.7505 | 0.0005<br>0.0065 |
| 2630-xxx | 1 5/8 x 1 7/8 | 1.6290<br>1.6320 | 1.8785<br>1.8765 | 1.6250<br>1.6245 | 1.8750<br>1.8755 | 0.0005<br>0.0065 |
| 2832-xxx | 1 ¾ x 2 | 1.7550<br>1.7580 | 2.0035<br>2.0015 | 1.7500<br>1.7495 | 2.0000<br>2.0005 | 0.0015<br>0.0075 |
| 3034-xxx | 1 7/8 x 2 1/8 | 1.8800<br>1.8830 | 2.1285<br>2.1265 | 1.8750<br>1.8745 | 2.1250<br>2.1255 | 0.0015<br>0.0075 |
| 3236-xxx | 2 x 2 ¼ | 2.0055<br>2.0095 | 2.2545<br>2.2525 | 2.0000<br>1.9995 | 2.2500<br>2.2510 | 0.0010<br>0.0085 |
| 3438-xxx | 2 1/8 x 2¼ | 2.1305<br>2.1345 | 2.3795<br>2.3775 | 2.1250<br>2.1245 | 2.3750<br>2.3760 | 0.0010<br>0.0085 |
| 3640-xxx | 2¼ x 2½ | 2.2555<br>2.2595 | 2.5045<br>2.5025 | 2.2500<br>2.2495 | 2.5000<br>2.5010 | 0.0010<br>0.0085 |
| 3842-xxx | 2 3/8 x 2 5/8 | 2.3805<br>2.3845 | 2.6295<br>2.6275 | 2.3750<br>2.3740 | 2.6250<br>2.6260 | 0.0010<br>0.0090 |

| Bearing Part Number | Nominal Size ID x OD $D_i$ x $D_o$ | Bearing ID $D_i$ | Bearing OD $D_o$ | Recommended Sizes | | Running Clearance $C_D$ |
|---|---|---|---|---|---|---|
| GM, GF, HSG, MLG | | | | Shaft Dia. $D_J$ | Housing Dia. $D_H$ | |
| 4044-xxx | 2½ x 2¾ | 2.5060<br>2.5100 | 2.7545<br>2.7525 | 2.5000<br>2.4990 | 2.7500<br>2.7510 | 0.0015<br>0.0095 |
| 4448-xxx | 2¾ x 3 | 2.7560<br>2.7600 | 3.0050<br>3.0030 | 2.7500<br>2.7490 | 3.0000<br>3.0015 | 0.0010<br>0.0095 |
| 4852-xxx | 3 x 3¼ | 3.0065<br>3.0105 | 3.2550<br>3.2530 | 3.0000<br>2.9990 | 3.2500<br>3.2515 | 0.0015<br>0.0100 |
| 5256-xxx | 3¼ x 3½ | 3.2565<br>3.2605 | 3.5055<br>3.5035 | 3.2500<br>3.2490 | 3.5000<br>3.5020 | 0.0010<br>0.0100 |
| 5660-xxx | 3½ x 3¾ | 3.5065<br>3.5105 | 3.7555<br>3.7535 | 3.5000<br>3.4990 | 3.7500<br>3.7520 | 0.0010<br>0.0100 |
| 6064-xxx | 3¾ x 4 | 3.7565<br>3.7605 | 4.0055<br>4.0035 | 3.7500<br>3.7490 | 4.0000<br>4.0020 | 0.0010<br>0.0100 |
| 6468-xxx | 4 x 4¼ | 4.0090<br>4.0140 | 4.2570<br>4.2540 | 4.0000<br>3.9990 | 4.2500<br>4.2520 | 0.0020<br>0.0130 |
| 6872-xxx | 4¼ x 4½ | 4.2590<br>4.2640 | 4.5070<br>4.5040 | 4.2500<br>4.2490 | 4.5000<br>4.5020 | 0.0020<br>0.0130 |
| 7276-xxx | 4½ x 4¾ | 4.5090<br>4.5140 | 4.7570<br>4.7540 | 4.5000<br>4.4990 | 4.7500<br>4.7520 | 0.0020<br>0.0130 |
| 7680-xxx | 4¾ x 5 | 4.7590<br>4.7640 | 5.0070<br>5.0040 | 4.7500<br>4.7490 | 5.0000<br>5.0020 | 0.0020<br>0.0130 |
| 8084-xxx | 5 x 5¼ | 5.0090<br>5.0140 | 5.2570<br>5.2540 | 5.0000<br>4.9990 | 5.2500<br>5.2520 | 0.0020<br>0.0130 |
| 8488-xxx | 5¼ x 5½ | 5.2590<br>5.2640 | 5.5070<br>5.5040 | 5.2500<br>5.2490 | 5.5000<br>5.5020 | 0.0020<br>0.0130 |
| 8892-xxx | 5½ x 5¾ | 5.5090<br>5.5140 | 5.7570<br>5.7540 | 5.5000<br>5.4990 | 5.7500<br>5.7520 | 0.0020<br>0.0130 |
| 9296-xxx | 5¾ x 6 | 5.7590<br>5.7640 | 6.0070<br>6.0040 | 5.7500<br>5.7490 | 6.0000<br>6.0020 | 0.0020<br>0.0130 |
| 96100-xxx | 6 x 6¼ | 6.0120<br>6.0180 | 6.2590<br>6.2550 | 6.0000<br>5.9985 | 6.2500<br>6.2520 | 0.0030<br>0.0165 |

*All Dimensions in Inches.*
*Additional sizes available - please consult with GGB for further details.*

# GAR-MAX®, GAR-FIL®, HSG, MLG (Inch Sizes)

1/4" wall series

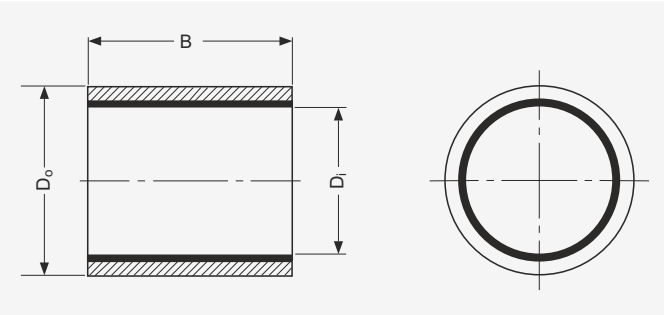


| Length tolerance table | | B | | |
|---|---|---|---|---|
| | | <3 inch | ≥3 to <6 inch | ≥6 inch |
| $D_i$ | <3 inch | ±0.010 inch | ±0.020 inch | ±0.030 inch |
| | ≥3 to<6 inch | ±0.020 inch | ±0.020 inch | ±0.030 inch |

To order, specify bearing product prefix and size number plus suffix for desired length (in multiples of 1/16").
e.g. GM2432-032 is a 1.5" ID x 2" OD x 2" long GAR-MAX® bearing.

| Bearing Part Number | Nominal Size ID x OD $D_i$ x $D_o$ | Bearing ID $D_i$ | Bearing OD $D_o$ | Recommended Sizes | | Running Clearance $C_D$ |
|---|---|---|---|---|---|---|
| GM, GF, HSG, MLG | | | | Shaft Dia. $D_J$ | Housing Dia. $D_H$ | |
| 0816-xxx | 1/2 x 1 | 0.5040<br>0.5070 | 1.0035<br>1.0015 | 0.5000<br>0.4995 | 1.0000<br>1.0005 | 0.0005<br>0.0065 |
| 1018-xxx | 5/8 x 1 1/8 | 0.6290<br>0.6320 | 1.1285<br>1.1265 | 0.6250<br>0.6245 | 1.1250<br>1.1255 | 0.0005<br>0.0065 |
| 1220-xxx | 3/4 x 1 1/4 | 0.7540<br>0.7570 | 1.2535<br>1.2515 | 0.7500<br>0.7495 | 1.2500<br>1.2505 | 0.0005<br>0.0065 |
| 1422-xxx | 7/8 x 1 3/8 | 0.8790<br>0.8820 | 1.3785<br>1.3765 | 0.8750<br>0.8745 | 1.3750<br>1.3755 | 0.0005<br>0.0065 |
| 1624-xxx | 1 x 1 1/2 | 1.0040<br>1.0070 | 1.5035<br>1.5015 | 1.0000<br>0.9995 | 1.5000<br>1.5005 | 0.0005<br>0.0065 |
| 1826-xxx | 1 1/8 x 1 5/8 | 1.1290<br>1.1320 | 1.6285<br>1.6265 | 1.1250<br>1.1245 | 1.6250<br>1.6255 | 0.0005<br>0.0065 |
| 2028-xxx | 1 1/4 x 1 3/4 | 1.2540<br>1.2570 | 1.7535<br>1.7515 | 1.2500<br>1.2495 | 1.7500<br>1.7505 | 0.0005<br>0.0065 |
| 2230-xxx | 1 3/8 x 1 7/8 | 1.3790<br>1.3820 | 1.8785<br>1.8765 | 1.3750<br>1.3745 | 1.8750<br>1.8755 | 0.0005<br>0.0065 |
| 2432-xxx | 1 1/2 x 2 | 1.5040<br>1.5070 | 2.0035<br>2.0015 | 1.5000<br>1.4995 | 2.0000<br>2.0005 | 0.0005<br>0.0065 |
| 2634-xxx | 1 5/8 x 2 1/8 | 1.6290<br>1.6320 | 2.1285<br>2.1265 | 1.6250<br>1.6245 | 2.1250<br>2.1255 | 0.0005<br>0.0065 |
| 2836-xxx | 1 3/4 x 2 1/4 | 1.7550<br>1.7580 | 2.2545<br>2.2525 | 1.7500<br>1.7495 | 2.2500<br>2.2510 | 0.0005<br>0.0070 |
| 3038-xxx | 1 7/8 x 2 3/8 | 1.8800<br>1.8830 | 2.3795<br>2.3775 | 1.8750<br>1.8745 | 2.3750<br>2.3760 | 0.0005<br>0.0070 |
| 3240-xxx | 2 x 2 1/2 | 2.0055<br>2.0095 | 2.5045<br>2.5025 | 2.0000<br>1.9995 | 2.5000<br>2.5010 | 0.0010<br>0.0085 |
| 3442-xxx | 2 1/8 x 2 5/8 | 2.1305<br>2.1345 | 2.6295<br>2.6275 | 2.1250<br>2.1245 | 2.6250<br>2.6260 | 0.0010<br>0.0085 |
| 3644-xxx | 2 1/4 x 2 3/4 | 2.2555<br>2.2595 | 2.7545<br>2.7525 | 2.2500<br>2.2495 | 2.7500<br>2.7510 | 0.0010<br>0.0085 |
| 3846-xxx | 2 3/8 x 2 7/8 | 2.3805<br>2.3845 | 2.8795<br>2.8775 | 2.3750<br>2.3740 | 2.8750<br>2.8760 | 0.0010<br>0.0090 |

| Bearing Part Number | Nominal Size ID x OD $D_i$ x $D_o$ | Bearing ID $D_i$ | Bearing OD $D_o$ | Recommended Sizes | | Running Clearance $C_D$ |
|---|---|---|---|---|---|---|
| GM, GF, HSG, MLG | | | | Shaft Dia. $D_J$ | Housing Dia. $D_H$ | |
| 4048-xxx | 2 1/2 x 3 | 2.5060<br>2.5100 | 3.0050<br>3.0030 | 2.5000<br>2.4990 | 3.0000<br>3.0015 | 0.0010<br>0.0095 |
| 4452-xxx | 2 3/4 x 3 1/4 | 2.7560<br>2.7600 | 3.2550<br>3.2530 | 2.7500<br>2.7490 | 3.2500<br>3.2515 | 0.0010<br>0.0095 |
| 4856-xxx | 3 x 3 1/2 | 3.0065<br>3.0105 | 3.5055<br>3.5035 | 3.0000<br>2.9990 | 3.5000<br>3.5020 | 0.0010<br>0.0100 |
| 5260-xxx | 3 1/4 x 3 3/4 | 3.2565<br>3.2605 | 3.7555<br>3.7535 | 3.2500<br>3.2490 | 3.7500<br>3.7520 | 0.0010<br>0.0100 |
| 5664-xxx | 3 1/2 x 4 | 3.5065<br>3.5105 | 4.0055<br>4.0035 | 3.5000<br>3.4990 | 4.0000<br>4.0020 | 0.0010<br>0.0100 |
| 6068-xxx | 3 3/4 x 4 1/4 | 3.7565<br>3.7605 | 4.2555<br>4.2535 | 3.7500<br>3.7490 | 4.2500<br>4.2520 | 0.0010<br>0.0100 |
| 6472-xxx | 4 x 4 1/2 | 4.0090<br>4.0140 | 4.5070<br>4.5040 | 4.0000<br>3.9990 | 4.5000<br>4.5020 | 0.0020<br>0.0130 |
| 6876-xxx | 4 1/4 x 4 3/4 | 4.2590<br>4.2640 | 4.7570<br>4.7540 | 4.2500<br>4.2490 | 4.7500<br>4.7520 | 0.0020<br>0.0130 |
| 7280-xxx | 4 1/2 x 5 | 4.5090<br>4.5140 | 5.0070<br>5.0040 | 4.5000<br>4.4990 | 5.0000<br>5.0020 | 0.0020<br>0.0130 |
| 7684-xxx | 4 3/4 x 5 1/4 | 4.7590<br>4.7640 | 5.2570<br>5.2540 | 4.7500<br>4.7490 | 5.2500<br>5.2520 | 0.0020<br>0.0130 |
| 8088-xxx | 5 x 5 1/2 | 5.0090<br>5.0140 | 5.5070<br>5.5040 | 5.0000<br>4.9990 | 5.5000<br>5.5020 | 0.0020<br>0.0130 |
| 8492-xxx | 5 1/4 x 5 3/4 | 5.2590<br>5.2640 | 5.7570<br>5.7540 | 5.2500<br>5.2490 | 5.7500<br>5.7520 | 0.0020<br>0.0130 |
| 8896-xxx | 5 1/2 x 6 | 5.5090<br>5.5140 | 6.0070<br>6.0040 | 5.5000<br>5.4990 | 6.0000<br>6.0020 | 0.0020<br>0.0130 |
| 92100-xxx | 5 3/4 x 6 1/4 | 5.7590<br>5.7640 | 6.2570<br>6.2540 | 5.7500<br>5.7490 | 6.2500<br>6.2520 | 0.0020<br>0.0130 |
| 96104-xxx | 6 x 6 1/2 | 6.0120<br>6.0180 | 6.5090<br>6.5050 | 6.0000<br>5.9985 | 6.5000<br>6.5020 | 0.0030<br>0.0165 |

*All Dimensions in Inches.*
*Additional sizes available - please consult with GGB for futher details.*

# GAR-MAX®, GAR-FIL®, HSG, MLG (Metric Sizes)

2.5 mm wall series

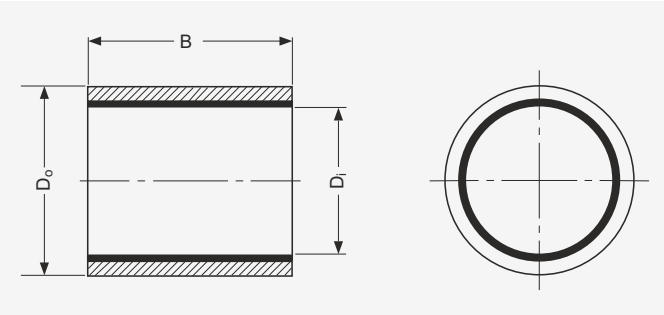


| Length tolerance table | | B | | |
|---|---|---|---|---|
| | | <75 mm | ≥75 to <150 mm | ≥150 mm |
| $D_I$ | <75 mm | -0.50 mm | -1.00 mm | -1.50 mm |
| | ≥75 to <150 mm | -1.00 mm | -1.00 mm | -1.50 mm |

To order, specify bearing ID, OD and length size number (in millimeters) plus product suffix.
e.g. 253020GM is a 25 mm ID x 30 mm OD x 20 mm long GAR-MAX® bearing.

| Bearing Part Number | Nominal Size ID x OD $D_i$ x $D_o$ | Bearing ID $D_i$ | Bearing OD $D_o$ | Recommended Sizes | | Running Clearance $C_D$ |
|---|---|---|---|---|---|---|
| GM, GF, HSG, MLG | | | | Shaft Dia. [h8] $D_J$ | Housing Dia. [H7] $D_H$ | |
| 1217xx | 12 x 17 | 12.110<br>12.190 | 17.090<br>17.040 | 12.000<br>11.973 | 17.000<br>17.018 | 0.020<br>0.195 |
| 1520xx | 15 x 20 | 15.110<br>15.190 | 20.090<br>20.040 | 15.000<br>14.973 | 20.000<br>20.021 | 0.020<br>0.198 |
| 1621xx | 16 x 21 | 16.110<br>16.190 | 21.090<br>21.040 | 16.000<br>15.973 | 21.000<br>21.021 | 0.020<br>0.198 |
| 1823xx | 18 x 23 | 18.110<br>18.190 | 23.090<br>23.040 | 18.000<br>17.973 | 23.000<br>23.021 | 0.020<br>0.198 |
| 2025xx | 20 x 25 | 20.110<br>20.190 | 25.090<br>25.040 | 20.000<br>19.967 | 25.000<br>25.021 | 0.020<br>0.204 |
| 2227xx | 22 x 27 | 22.110<br>22.190 | 27.090<br>27.040 | 22.000<br>21.967 | 27.000<br>27.021 | 0.020<br>0.204 |
| 2530xx | 25 x 30 | 25.110<br>25.190 | 30.090<br>30.040 | 25.000<br>24.967 | 30.000<br>30.021 | 0.020<br>0.204 |
| 2833xx | 28 x 33 | 28.115<br>28.195 | 33.095<br>33.045 | 28.000<br>27.967 | 33.000<br>33.025 | 0.020<br>0.208 |
| 3035xx | 30 x 35 | 30.115<br>30.195 | 35.095<br>35.045 | 30.000<br>29.967 | 35.000<br>35.025 | 0.020<br>0.208 |
| 3540xx | 35 x 40 | 35.115<br>35.195 | 40.095<br>40.045 | 35.000<br>34.961 | 40.000<br>40.025 | 0.020<br>0.214 |
| 4045xx | 40 x 45 | 40.115<br>40.195 | 45.095<br>45.045 | 40.000<br>39.961 | 45.000<br>45.025 | 0.020<br>0.214 |
| 4550xx | 45 x 50 | 45.125<br>45.225 | 50.100<br>50.050 | 45.000<br>44.961 | 50.000<br>50.025 | 0.025<br>0.239 |
| 5055xx | 50 x 55 | 50.125<br>50.225 | 55.100<br>55.055 | 50.000<br>49.961 | 55.000<br>55.030 | 0.025<br>0.239 |
| 5560xx | 55 x 60 | 55.140<br>55.240 | 60.115<br>60.065 | 55.000<br>54.954 | 60.000<br>60.030 | 0.025<br>0.251 |
| 6065xx | 60 x 65 | 60.140<br>60.240 | 65.115<br>65.065 | 60.000<br>59.954 | 65.000<br>65.030 | 0.025<br>0.251 |
| 6570xx | 65 x 70 | 65.140<br>65.240 | 70.115<br>70.065 | 65.000<br>64.954 | 70.000<br>70.030 | 0.025<br>0.251 |

| Bearing Part Number | Nominal Size ID x OD $D_i$ x $D_o$ | Bearing ID $D_i$ | Bearing OD $D_o$ | Recommended Sizes | | Running Clearance $C_D$ |
|---|---|---|---|---|---|---|
| GM, GF, HSG, MLG | | | | Shaft Dia. [h8] $D_J$ | Housing Dia. [H7] $D_H$ | |
| 7075xx | 70 x 75 | 70.145<br>70.245 | 75.115<br>75.065 | 70.000<br>69.954 | 75.000<br>75.030 | 0.030<br>0.256 |
| 7580xx | 75 x 80 | 75.165<br>75.265 | 80.125<br>80.070 | 75.000<br>74.954 | 80.000<br>80.030 | 0.040<br>0.271 |
| 8085xx | 80 x 85 | 80.165<br>80.265 | 85.125<br>85.075 | 80.000<br>79.954 | 85.000<br>85.035 | 0.040<br>0.271 |
| 8590xx | 85 x 90 | 85.165<br>85.265 | 90.125<br>90.075 | 85.000<br>84.946 | 90.000<br>90.035 | 0.040<br>0.279 |
| 9095xx | 90 x 95 | 90.175<br>90.275 | 95.135<br>95.085 | 90.000<br>89.946 | 95.000<br>95.035 | 0.040<br>0.279 |
| 95100xx | 95 x 100 | 95.175<br>95.300 | 100.135<br>100.085 | 95.000<br>94.946 | 100.000<br>100.035 | 0.040<br>0.304 |
| 100105xx | 100 x 105 | 100.175<br>100.300 | 105.135<br>105.085 | 100.000<br>99.946 | 105.000<br>105.035 | 0.040<br>0.304 |
| 110115xx | 110 x 115 | 110.175<br>110.300 | 115.135<br>115.080 | 110.000<br>109.946 | 115.000<br>115.035 | 0.040<br>0.309 |
| 120125xx | 120 x 125 | 120.205<br>120.330 | 125.165<br>125.105 | 120.000<br>119.946 | 125.000<br>125.040 | 0.040<br>0.319 |
| 130135xx | 130 x 135 | 130.205<br>130.330 | 135.165<br>135.090 | 130.000<br>129.937 | 135.000<br>135.040 | 0.040<br>0.343 |
| 140145xx | 140 x 145 | 140.205<br>140.330 | 145.165<br>145.090 | 140.000<br>139.937 | 145.000<br>145.040 | 0.040<br>0.343 |
| 150155xx | 150 x 155 | 150.205<br>150.330 | 155.165<br>155.090 | 150.000<br>149.937 | 155.000<br>155.040 | 0.040<br>0.343 |

*All Dimensions in Millimeters.*
*Additional sizes available - please consult with GGB for futher details.*

# GAR-MAX®, GAR-FIL®, HSG, MLG (Metric Sizes)

5 mm wall series

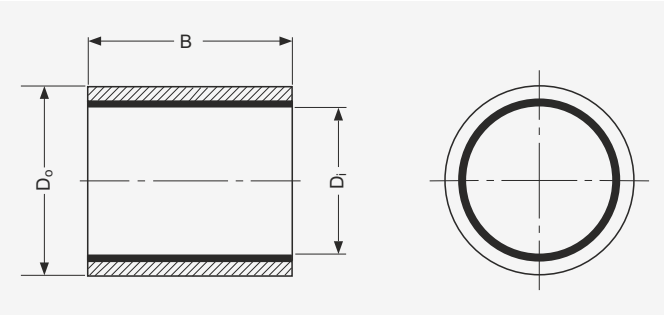


| Length tolerance table | | B | | |
|---|---|---|---|---|
| | | <75 mm | ≥75 to <150 mm | ≥150 mm |
| $D_i$ | <75 mm | -0.50 mm | -1.00 mm | -1.50 mm |
| | ≥75 to <150 mm | -1.00 mm | -1.00 mm | -1.50 mm |

To order, specify bearing ID, OD and length size number (in millimeters) plus product suffix.
e.g. 253520GM is a 25 mm ID x 30 mm OD x 20 mm long GAR-MAX® bearing.

| Bearing Part Number | Nominal Size ID x OD $D_i$ x $D_o$ | Bearing ID $D_i$ | Bearing OD $D_o$ | Recommended Sizes | | Running Clearance $C_D$ |
|---|---|---|---|---|---|---|
| GM, GF, HSG, MLG | | | | Shaft Dia. [h8] $D_J$ | Housing Dia. [H7] $D_H$ | |
| 1222xx | 12 x 22 | 12.110<br>12.190 | 22.090<br>22.040 | 12.000<br>11.973 | 22.000<br>22.021 | 0.020<br>0.198 |
| 1525xx | 15 x 25 | 15.110<br>15.190 | 25.090<br>25.040 | 15.000<br>14.973 | 25.000<br>25.021 | 0.020<br>0.198 |
| 1626xx | 16 x 26 | 16.110<br>16.190 | 26.090<br>26.040 | 16.000<br>15.973 | 26.000<br>26.021 | 0.020<br>0.198 |
| 1828xx | 18 x 28 | 18.110<br>18.190 | 28.090<br>28.040 | 18.000<br>17.973 | 28.000<br>28.021 | 0.020<br>0.198 |
| 2030xx | 20 x 30 | 20.110<br>20.190 | 30.090<br>30.040 | 20.000<br>19.967 | 30.000<br>30.021 | 0.020<br>0.204 |
| 2232xx | 22 x 32 | 22.115<br>22.195 | 32.095<br>32.045 | 22.000<br>21.967 | 32.000<br>32.025 | 0.020<br>0.208 |
| 2535xx | 25 x 35 | 25.115<br>25.195 | 35.095<br>35.045 | 25.000<br>24.967 | 35.000<br>35.025 | 0.020<br>0.208 |
| 2838xx | 28 x 38 | 28.115<br>28.195 | 38.095<br>38.045 | 28.000<br>27.967 | 38.000<br>38.025 | 0.020<br>0.208 |
| 3040xx | 30 x 40 | 30.115<br>30.195 | 40.095<br>40.045 | 30.000<br>29.967 | 40.000<br>40.025 | 0.020<br>0.208 |
| 3545xx | 35 x 45 | 35.115<br>35.195 | 45.095<br>45.045 | 35.000<br>34.961 | 45.000<br>45.025 | 0.020<br>0.214 |
| 4050xx | 40 x 50 | 40.115<br>40.195 | 50.095<br>50.045 | 40.000<br>39.961 | 50.000<br>50.025 | 0.020<br>0.214 |
| 4555xx | 45 x 55 | 45.130<br>45.230 | 55.105<br>55.055 | 45.000<br>44.961 | 55.000<br>55.030 | 0.025<br>0.244 |
| 5060xx | 50 x 60 | 50.130<br>50.230 | 60.105<br>60.055 | 50.000<br>49.961 | 60.000<br>60.030 | 0.025<br>0.244 |
| 5565xx | 55 x 65 | 55.140<br>55.240 | 65.115<br>65.065 | 55.000<br>54.954 | 65.000<br>65.030 | 0.025<br>0.251 |
| 6070xx | 60 x 70 | 60.140<br>60.240 | 70.115<br>70.065 | 60.000<br>59.954 | 70.000<br>70.030 | 0.025<br>0.251 |
| 6575xx | 65 x 75 | 65.140<br>65.240 | 75.115<br>75.065 | 65.000<br>64.954 | 75.000<br>75.030 | 0.025<br>0.251 |

| Bearing Part Number | Nominal Size ID x OD $D_i$ x $D_o$ | Bearing ID $D_i$ | Bearing OD $D_o$ | Recommended Sizes | | Running Clearance $C_D$ |
|---|---|---|---|---|---|---|
| GM, GF, HSG, MLG | | | | Shaft Dia. [h8] $D_J$ | Housing Dia. [H7] $D_H$ | |
| 7080xx | 70 x 80 | 70.145<br>70.245 | 80.115<br>80.065 | 70.000<br>69.954 | 80.000<br>80.030 | 0.030<br>0.256 |
| 7585xx | 75 x 85 | 75.165<br>75.265 | 85.125<br>85.075 | 75.000<br>74.954 | 85.000<br>85.035 | 0.040<br>0.271 |
| 8090xx | 80 x 90 | 80.165<br>80.265 | 90.125<br>90.075 | 80.000<br>79.954 | 90.000<br>90.035 | 0.040<br>0.271 |
| 8595xx | 85 x 95 | 85.165<br>85.265 | 95.125<br>95.075 | 85.000<br>84.946 | 95.000<br>95.035 | 0.040<br>0.279 |
| 90100xx | 90 x 100 | 90.175<br>90.275 | 100.135<br>100.085 | 90.000<br>89.946 | 100.000<br>100.035 | 0.040<br>0.279 |
| 95105xx | 95 x 105 | 95.175<br>95.300 | 105.135<br>105.085 | 95.000<br>94.946 | 105.000<br>105.035 | 0.040<br>0.304 |
| 100110xx | 100 x 110 | 100.175<br>100.300 | 110.135<br>110.085 | 100.000<br>99.946 | 110.000<br>110.035 | 0.040<br>0.304 |
| 110120xx | 110 x 120 | 110.175<br>110.300 | 120.135<br>120.085 | 110.000<br>109.946 | 120.000<br>120.035 | 0.040<br>0.304 |
| 120130xx | 120 x 130 | 120.205<br>120.330 | 130.165<br>130.090 | 120.000<br>119.946 | 130.000<br>130.040 | 0.040<br>0.334 |
| 130140xx | 130 x 140 | 130.205<br>130.330 | 140.165<br>140.090 | 130.000<br>129.937 | 140.000<br>140.040 | 0.040<br>0.343 |
| 140150xx | 140 x 150 | 140.205<br>140.330 | 150.165<br>150.090 | 140.000<br>139.937 | 150.000<br>150.040 | 0.040<br>0.343 |
| 150160xx | 150 x 160 | 150.205<br>150.330 | 160.165<br>160.090 | 150.000<br>149.937 | 160.000<br>160.040 | 0.040<br>0.343 |

*All Dimensions in Millimeters.*
*Additional sizes available - please consult with GGB for futher details.*

# 8.3 European GAR-MAX® Size Range

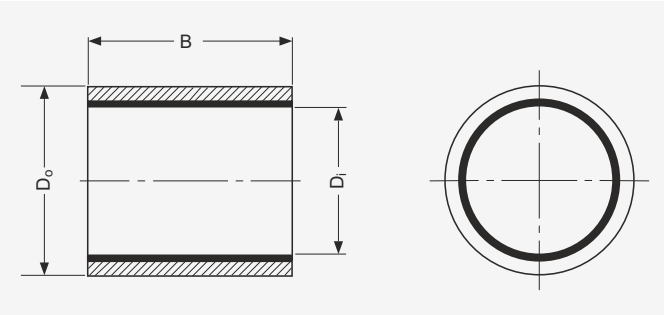


| Length tolerance table | | B | | |
|---|---|---|---|---|
| | | <75 mm | ≥75 to <150 mm | ≥150 mm |
| $D_i$ | <75 mm | -0.50 mm | -1.00 mm | -1.50 mm |
| | ≥75 to <150 mm | -1.00 mm | -1.00 mm | -1.50 mm |

To order, specify bearing ID, OD and length size number (in millimeters) plus product suffix.
e.g. 253020GM is a 25 mm ID x 30 mm OD x 20 mm long GAR-MAX® bearing.

| Part Number | Nominal Size ID x OD x Length, $D_i$ x $D_o$ x B | Bearing ID, $D_i$ | Bearing OD, $D_o$ | Shaft, h8 | Housing, H7 | Clearance (after assembly in H7 housing) |
|---|---|---|---|---|---|---|
| 162015GM | 16 x 20 x 15 | 16.110 / 16.190 | 20.090 / 20.040 | 16.000 / 15.973 | 20.000 / 20.021 | 0.020 / 0.198 |
| 162020GM | 16 x 20 x 20 | 16.110 / 16.190 | 20.090 / 20.040 | 16.000 / 15.973 | 20.000 / 20.021 | 0.020 / 0.198 |
| 202415GM | 20 x 24 x 15 | 20.110 / 20.190 | 24.090 / 24.040 | 20.000 / 19.967 | 24.000 / 24.021 | 0.020 / 0.204 |
| 202420GM | 20 x 24 x 20 | 20.110 / 20.190 | 24.090 / 24.040 | 20.000 / 19.967 | 24.000 / 24.021 | 0.020 / 0.204 |
| 202425GM | 20 x 24 x 25 | 20.110 / 20.190 | 24.090 / 24.040 | 20.000 / 19.967 | 24.000 / 24.021 | 0.020 / 0.204 |
| 222620GM | 22 x 26 x 20 | 22.110 / 22.190 | 26.090 / 26.040 | 22.000 / 21.967 | 26.000 / 26.021 | 0.020 / 0.204 |
| 222625GM | 22 x 26 x 25 | 22.110 / 22.190 | 26.090 / 26.040 | 22.000 / 21.967 | 26.000 / 26.021 | 0.020 / 0.204 |
| 253020GM | 25 x 30 x 20 | 25.110 / 25.190 | 30.090 / 30.040 | 25.000 / 24.967 | 30.000 / 30.021 | 0.020 / 0.204 |
| 253025GM | 25 x 30 x 25 | 25.110 / 25.190 | 30.090 / 30.040 | 25.000 / 24.967 | 30.000 / 30.021 | 0.020 / 0.204 |
| 253030GM | 25 x 30 x 30 | 25.110 / 25.190 | 30.090 / 30.040 | 25.000 / 24.967 | 30.000 / 30.021 | 0.020 / 0.204 |
| 283422GM | 28 x 34 x 22 | 28.115 / 28.195 | 34.095 / 34.045 | 28.000 / 27.967 | 34.000 / 34.025 | 0.020 / 0.208 |
| 303620GM | 30 x 36 x 20 | 30.115 / 30.195 | 36.095 / 36.045 | 30.000 / 29.967 | 36.000 / 36.025 | 0.020 / 0.208 |
| 303630GM | 30 x 36 x 30 | 30.115 / 30.195 | 36.095 / 36.045 | 30.000 / 29.967 | 36.000 / 36.025 | 0.020 / 0.208 |
| 303636GM | 30 x 36 x 36 | 30.115 / 30.195 | 36.095 / 36.045 | 30.000 / 29.967 | 36.000 / 36.025 | 0.020 / 0.208 |
| 303640GM | 30 x 36 x 40 | 30.115 / 30.195 | 36.095 / 36.045 | 30.000 / 29.967 | 36.000 / 36.025 | 0.020 / 0.208 |
| 303650GM | 30 x 36 x 50 | 30.115 / 30.195 | 36.095 / 36.045 | 30.000 / 29.967 | 36.000 / 36.025 | 0.020 / 0.208 |
| 354130GM | 35 x 41 x 30 | 35.115 / 35.195 | 41.095 / 41.045 | 35.000 / 34.961 | 41.000 / 41.025 | 0.020 / 0.214 |
| 354135GM | 35 x 41 x 35 | 35.115 / 35.195 | 41.095 / 41.045 | 35.000 / 34.961 | 41.000 / 41.025 | 0.020 / 0.214 |
| 354140GM | 35 x 41 x 40 | 35.115 / 35.195 | 41.095 / 41.045 | 35.000 / 34.961 | 41.000 / 41.025 | 0.020 / 0.214 |
| 354150GM | 35 x 41 x 50 | 35.115 / 35.195 | 41.095 / 41.045 | 35.000 / 34.961 | 41.000 / 41.025 | 0.020 / 0.214 |
| 404820GM | 40 x 48 x 20 | 40.115 / 40.195 | 48.095 / 48.045 | 40.000 / 39.961 | 48.000 / 48.025 | 0.020 / 0.214 |
| 404830GM | 40 x 48 x 30 | 40.115 / 40.195 | 48.095 / 48.045 | 40.000 / 39.961 | 48.000 / 48.025 | 0.020 / 0.214 |

| Part Number | Nominal Size ID x OD x Length, $D_i$ x $D_o$ x B | Bearing ID, $D_i$ | Bearing OD, $D_o$ | Shaft, h8 | Housing, H7 | Clearance (after assembly in H7 housing) |
|---|---|---|---|---|---|---|
| 404840GM | 40 x 48 x 40 | 40.115 / 40.195 | 48.095 / 48.045 | 40.000 / 39.961 | 48.000 / 48.025 | 0.020 / 0.214 |
| 404850GM | 40 x 48 x 50 | 40.115 / 40.195 | 48.095 / 48.045 | 40.000 / 39.961 | 48.000 / 48.025 | 0.020 / 0.214 |
| 455330GM | 45 x 53 x 30 | 45.130 / 45.230 | 53.105 / 53.055 | 45.000 / 44.961 | 53.000 / 53.030 | 0.025 / 0.244 |
| 455340GM | 45 x 53 x 40 | 45.130 / 45.230 | 53.105 / 53.055 | 45.000 / 44.961 | 53.000 / 53.030 | 0.025 / 0.244 |
| 455345GM | 45 x 53 x 45 | 45.130 / 45.230 | 53.105 / 53.055 | 45.000 / 44.961 | 53.000 / 53.030 | 0.025 / 0.244 |
| 455350GM | 45 x 53 x 50 | 45.130 / 45.230 | 53.105 / 53.055 | 45.000 / 44.961 | 53.000 / 53.030 | 0.025 / 0.244 |
| 455360GM | 45 x 53 x 60 | 45.130 / 45.230 | 53.105 / 53.055 | 45.000 / 44.961 | 53.000 / 53.030 | 0.025 / 0.244 |
| 505830GM | 50 x 58 x 30 | 50.130 / 50.230 | 58.105 / 58.055 | 50.000 / 49.961 | 58.000 / 58.030 | 0.025 / 0.244 |
| 505840GM | 50 x 58 x 40 | 50.130 / 50.230 | 58.105 / 58.055 | 50.000 / 49.961 | 58.000 / 58.030 | 0.025 / 0.244 |
| 505850GM | 50 x 58 x 50 | 50.130 / 50.230 | 58.105 / 58.055 | 50.000 / 49.961 | 58.000 / 58.030 | 0.025 / 0.244 |
| 505860GM | 50 x 58 x 60 | 50.130 / 50.230 | 58.105 / 58.055 | 50.000 / 49.961 | 58.000 / 58.030 | 0.025 / 0.244 |
| 556330GM | 55 x 63 x 30 | 55.140 / 55.240 | 63.115 / 63.065 | 55.000 / 54.954 | 63.000 / 63.030 | 0.025 / 0.251 |
| 556340GM | 55 x 63 x 40 | 55.140 / 55.240 | 63.115 / 63.065 | 55.000 / 54.954 | 63.000 / 63.030 | 0.025 / 0.251 |
| 556360GM | 55 x 63 x 60 | 55.140 / 55.240 | 63.115 / 63.065 | 55.000 / 54.954 | 63.000 / 63.030 | 0.025 / 0.251 |
| 607030GM | 60 x 70 x 30 | 60.140 / 60.240 | 70.115 / 70.065 | 60.000 / 59.954 | 70.000 / 70.030 | 0.025 / 0.251 |
| 607040GM | 60 x 70 x 40 | 60.140 / 60.240 | 70.115 / 70.065 | 60.000 / 59.954 | 70.000 / 70.030 | 0.025 / 0.251 |
| 607045GM | 60 x 70 x 45 | 60.140 / 60.240 | 70.115 / 70.065 | 60.000 / 59.954 | 70.000 / 70.030 | 0.025 / 0.251 |
| 607050GM | 60 x 70 x 50 | 60.140 / 60.240 | 70.115 / 70.065 | 60.000 / 59.954 | 70.000 / 70.030 | 0.025 / 0.251 |
| 607060GM | 60 x 70 x 60 | 60.140 / 60.240 | 70.115 / 70.065 | 60.000 / 59.954 | 70.000 / 70.030 | 0.025 / 0.251 |
| 657550GM | 65 x 75 x 50 | 65.140 / 65.240 | 75.115 / 75.065 | 65.000 / 64.954 | 75.000 / 75.030 | 0.025 / 0.251 |
| 708040GM | 70 x 80 x 40 | 70.145 / 70.245 | 80.115 / 80.065 | 70.000 / 69.954 | 80.000 / 80.030 | 0.030 / 0.256 |
| 708050GM | 70 x 80 x 50 | 70.145 / 70.245 | 80.115 / 80.065 | 70.000 / 69.954 | 80.000 / 80.030 | 0.030 / 0.256 |
| 708055GM | 70 x 80 x 55 | 70.145 / 70.245 | 80.115 / 80.065 | 70.000 / 69.954 | 80.000 / 80.030 | 0.030 / 0.256 |
| 708060GM | 70 x 80 x 60 | 70.145 / 70.245 | 80.115 / 80.065 | 70.000 / 69.954 | 80.000 / 80.030 | 0.030 / 0.256 |
| 708070GM | 70 x 80 x 70 | 70.145 / 70.245 | 80.115 / 80.065 | 70.000 / 69.954 | 80.000 / 80.030 | 0.030 / 0.256 |
| 708080GM | 70 x 80 x 80 | 70.145 / 70.245 | 80.115 / 80.065 | 70.000 / 69.954 | 80.000 / 80.030 | 0.030 / 0.256 |
| 758550GM | 75 x 85 x 50 | 75.165 / 75.265 | 85.125 / 85.075 | 75.000 / 74.954 | 85.000 / 85.035 | 0.040 / 0.271 |
| 758560GM | 75 x 85 x 60 | 75.165 / 75.265 | 85.125 / 85.075 | 75.000 / 74.954 | 85.000 / 85.035 | 0.040 / 0.271 |
| 758570GM | 75 x 85 x 70 | 75.165 / 75.265 | 85.125 / 85.075 | 75.000 / 74.954 | 85.000 / 85.035 | 0.040 / 0.271 |
| 758580GM | 75 x 85 x 80 | 75.165 / 75.265 | 85.125 / 85.075 | 75.000 / 74.954 | 85.000 / 85.035 | 0.040 / 0.271 |
| 809050GM | 80 x 90 x 50 | 80.165 / 80.265 | 90.125 / 90.075 | 80.000 / 79.954 | 90.000 / 90.035 | 0.040 / 0.271 |
| 809060GM | 80 x 90 x 60 | 80.165 / 80.265 | 90.125 / 90.075 | 80.000 / 79.954 | 90.000 / 90.035 | 0.040 / 0.271 |
| 809070GM | 80 x 90 x 70 | 80.165 / 80.265 | 90.125 / 90.075 | 80.000 / 79.954 | 90.000 / 90.035 | 0.040 / 0.271 |
| 809080GM | 80 x 90 x 80 | 80.165 / 80.265 | 90.125 / 90.075 | 80.000 / 79.954 | 90.000 / 90.035 | 0.040 / 0.271 |
| 859560GM | 85 x 95 x 60 | 85.165 / 85.265 | 95.125 / 95.075 | 85.000 / 84.946 | 95.000 / 95.035 | 0.040 / 0.279 |
| 859580GM | 85 x 95 x 80 | 85.165 / 85.265 | 95.125 / 95.075 | 85.000 / 84.946 | 95.000 / 95.035 | 0.040 / 0.279 |
| 9010570GM | 90 x 105 x 70 | 90.175 / 90.275 | 105.135 / 105.085 | 90.000 / 89.946 | 105.000 / 105.035 | 0.040 / 0.279 |
| 10011580GM | 100 x 115 x 80 | 100.175 / 100.300 | 115.135 / 115.085 | 100.000 / 99.946 | 115.000 / 115.035 | 0.040 / 0.304 |
| 100115100GM | 100 x 115 x 100 | 100.175 / 100.300 | 115.135 / 115.085 | 100.000 / 99.946 | 115.000 / 115.035 | 0.040 / 0.304 |
| 100115120GM | 100 x 115 x 120 | 100.175 / 100.300 | 115.135 / 115.085 | 100.000 / 99.946 | 115.000 / 115.035 | 0.040 / 0.304 |
| 110125100GM | 110 x 125 x 100 | 110.205 / 110.330 | 125.165 / 125.090 | 110.000 / 109.946 | 125.000 / 125.040 | 0.040 / 0.334 |
| 110125120GM | 110 x 125 x 120 | 110.205 / 110.330 | 125.165 / 125.090 | 110.000 / 109.946 | 125.000 / 125.040 | 0.040 / 0.334 |
| 120135100GM | 120 x 135 x 100 | 120.205 / 120.330 | 135.165 / 135.090 | 120.000 / 119.946 | 135.000 / 135.040 | 0.040 / 0.334 |
| 120135120GM | 120 x 135 x 120 | 120.205 / 120.330 | 135.165 / 135.090 | 120.000 / 119.946 | 135.000 / 135.040 | 0.040 / 0.334 |

*All Dimensions in Millimeters.*
*Additional sizes available - please consult with GGB for futher details.*

# 8.4 GGB-MEGALIFE™ XT Thrust Washers, Inch sizes

To order, specify MWXT size number plus suffix for desired thickness (062, 080, 125).
e.g. MWXT1632-080 is a 1" ID x 2" OD x 0.080" thick GGB-MEGALIFE™ XT thrust washer.

| Part Number | Nominal Size ID x OD | Nominal Thickness |
|---|---|---|
| MWXT0816-xxx | 1/2 x 1 | 0.062, 0.080 |
| MWXT1020-xxx | 5/8 x 1 1/4 | 0.062, 0.080, 0.125 |
| MWXT1224-xxx | 3/4 x 1 1/2 | 0.062, 0.080, 0.125 |
| MWXT1428-xxx | 7/8 x 1 3/4 | 0.062, 0.080, 0.125 |
| MWXT1632-xxx | 1 x 2 | 0.062, 0.080, 0.125 |
| MWXT1834-xxx | 1 1/8 x 2 1/8 | 0.062, 0.080, 0.125 |
| MWXT2036-xxx | 1 1/4 x 2 1/4 | 0.062, 0.080, 0.125 |
| MWXT2238-xxx | 1 3/8 x 2 3/8 | 0.062, 0.080, 0.125 |
| MWXT2440-xxx | 1 1/2 x 2 1/2 | 0.062, 0.080, 0.125 |
| MWXT2642-xxx | 1 5/8 x 2 5/8 | 0.062, 0.080, 0.125 |
| MWXT2844-xxx | 1 3/4 x 2 3/4 | 0.062, 0.080, 0.125 |
| MWXT3248-xxx | 2 x 3 | 0.062, 0.080, 0.125 |
| MWXT3652-xxx | 2 1/4 x 3 1/4 | 0.062, 0.080, 0.125 |
| MWXT4060-xxx | 2 1/2 x 3 3/4 | 0.062, 0.080, 0.125 |
| MWXT4464-xxx | 2 3/4 x 4 | 0.062, 0.080, 0.125 |
| MWXT4872-xxx | 3 x 4 1/2 | 0.062, 0.080, 0.125 |

*All Dimensions in Inches.*
*Additional sizes available - please consult with GGB for futher details.*

# 8.5 GGB-MEGALIFE™ XT Thrust Washers, Metric sizes

To order, specify MWXTM size number plus suffix for desired thickness (15; 20; 30).
e.g. MWXTM2244-20 is a 22 mm ID x 44 mm OD x 2 mm thick GGB-MEGALIFE™ XT thrust washer.

| Part Number | Nominal Size ID x OD | Nominal Thickness |
|---|---|---|
| MWXTM1224-xx | 12 x 24 | 1.5, 2.0 mm |
| MWXTM1530-xx | 15 x 30 | 1.5, 2.0, 3.0 mm |
| MWXTM1836-xx | 18 x 36 | 1.5, 2.0, 3.0 mm |
| MWXTM2040-xx | 20 x 40 | 1.5, 2.0, 3.0 mm |
| MWXTM2244-xx | 22 x 44 | 1.5, 2.0, 3.0 mm |
| MWXTM2550-xx | 25 x 50 | 1.5, 2.0, 3.0 mm |
| MWXTM3055-xx | 30 x 55 | 1.5, 2.0, 3.0 mm |
| MWXTM3560-xx | 35 x 60 | 1.5, 2.0, 3.0 mm |
| MWXTM4065-xx | 40 x 65 | 1.5, 2.0, 3.0 mm |
| MWXTM4570-xx | 45 x 70 | 1.5, 2.0, 3.0 mm |
| MWXTM5075-xx | 50 x 75 | 1.5, 2.0, 3.0 mm |
| MWXTM5580-xx | 55 x 80 | 1.5, 2.0, 3.0 mm |
| MWXTM6085-xx | 60 x 85 | 1.5, 2.0, 3.0 mm |
| MWXTM6595-xx | 65 x 95 | 1.5, 2.0, 3.0 mm |
| MWXTM70100-xx | 70 x 100 | 1.5, 2.0, 3.0 mm |
| MWXTM75115-xx | 75 x 115 | 1.5, 2.0, 3.0 mm |

*All Dimensions in Millimeters.*
*Additional sizes available - please consult with GGB for futher details.*

# 8.6 Datasheet

Not sure which GGB part fits your application requirements? Go to https://www.ggbpartfinder.com/ to complete a Bearing Application Data Sheet online, and one of our GGB bearing specialists will reach out to you with recommended options that meet your application requirements. You can also complete the form below and share it with your GGB sales person or distributor representative.

DATA FOR BEARING DESIGN CALCULATION

Application: _____

Project / No.: _____ Quantity: _____ ☐ New Design ☐ Existing Design

### DIMENSIONS (mm)

| | | |
|---|---|---|
| Inside diameter | $D_i$ | |
| Outside diameter | $D_o$ | |
| Length | B | |
| Flange diameter | $D_{fl}$ | |
| Flange thickness | $B_{fl}$ | |
| Wall thickness | $S_T$ | |
| Length of slideplate | L | |
| Width of slideplate | W | |
| Thickness of slideplate | $S_S$ | |

### LOAD

| | | |
|---|---|---|
| Radial load F | static [N]<br>dynamic [N] | |
| Axial load F | static [N]<br>dynamic [N] | |
| Specific load p | radial [MPa]<br>axial [MPa] | |

### MOVEMENT

| | | |
|---|---|---|
| Rotational speed | N [1/min] | |
| Speed | U [m/s] | |
| Length of stroke | $L_S$ [mm] | |
| Frequency of stroke | [1/min] | |
| Oscillating cycle | ϕ [°] | |
| Osc. frequence | $N_{OSZ}$ [1/min] | |

### MATING SURFACE

| | | |
|---|---|---|
| Material | | |
| Hardness | HB/HRC | |
| Surface finish | Ra [µm] | |

### FITS & TOLERANCES

| | | |
|---|---|---|
| Shaft | $D_J$ | |
| Bearing housing | $D_H$ | |

### OPERATING ENVIRONMENT

| | | |
|---|---|---|
| Ambient temperature | $T_{amb}$[°] | |

☐ Housing with good heating transfer properties

☐ Light pressing or insulated housing with poor heat transfer properties

☐ Non metal housing with poor heat transfer properties

☐ Alternate operation in water and dry

### LUBRICATION

☐ Dry

☐ Continuous lubrication

☐ Process fluid lubrication

☐ Initial lubrication only

☐ Hydrodynamic conditions

| | | |
|---|---|---|
| Process fluid | | |
| Lubricant | | |
| Dynamic viscosity | η | |

### SERVICE HOURS PER DAY

| | |
|---|---|
| Continuous operation | |
| Intermittent operation | |
| Operating time | |
| Days per year | |

### SERVICE LIFE

| | | |
|---|---|---|
| Required service life | $L_H$ [h] | |

### BEARING TYPE:

☐ Cylindrical bush

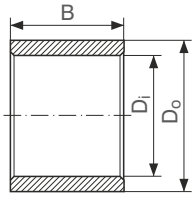


☐ Flanged bush

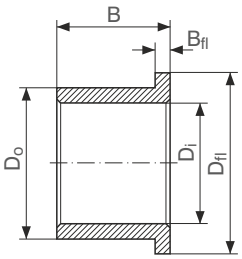


☐ Thrust washer

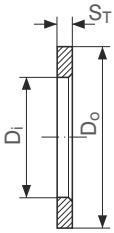


☐ Slideplate

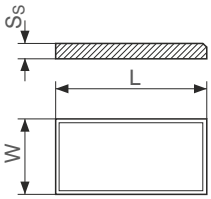


☐ Special parts (sketch)

☐ Rotational movement

☐ Steady load

☐ Rotating load

☐ Oscillating movement

☐ Linear movement

### CUSTOMER INFORMATION

Company _____

Street _____

City / State / Province / Post Code _____

Telephone _____ Fax _____

Name _____

Email Address _____ Date _____

## Formula Symbols and Designations

| SYMBOL | IMPERIAL | METRIC | DESIGNATION |
|---|---|---|---|
| $a_B$ | - | - | Bearing size factor |
| $a_E$ | - | - | High load factor |
| $a_M$ | - | - | Mating material factor |
| $a_S$ | - | - | Surface inish factor |
| $a_T$ | - | - | Temperature application factor |
| B | inch | mm | Nominal bush length |
| $C_D$ | inch | mm | Installed diametral clearance |
| $D_H$ | inch | mm | Housing diameter |
| $D_i$ | inch | mm | Nominal bush ID |
| | | | Nominal thrust washer ID |
| $D_o$ | inch | mm | Nominal bush OD |
| | | | Nominal thrust washer OD |
| $D_J$ | inch | mm | Shaft diameter |
| F | lbs. | N | Bearing load |
| $L_Q$ | - | - | Bearing service life, cycles |
| n | 1/min | 1/min | Rotational speed |
| $n_{osc}$ | 1/min | 1/min | Rotational speed |
| | | | for oscillating motion |
| p | psi | N/mm² | Speciic load |
| $p_{lim}$ | psi | N/mm² | Speciic load limit |
| $p_{sta,max}$ | psi | N/mm² | Maximum static load |
| $p_{dyn,max}$ | psi | N/mm² | Maximum dynamic load |

| SYMBOL | IMPERIAL | METRIC | DESIGNATION |
|---|---|---|---|
| $Q_{GF}$ | - | - | GAR-FIL® cyclic life factor |
| $Q_{GM}$ | - | - | GAR-MAX® and HSG cyclic life factor |
| $Q_{MLG}$ | - | - | MLG cyclic life factor |
| $R_a$ | µinch | µm | Surface roughness |
| $S_m$ | psi | N/mm² | Calculated edge stress |
| $S_S$ | inch | mm | Thickness of slideplate |
| $S_T$ | inch | mm | Thickness of washer |
| s | inch | mm | Bush wall thickness |
| T | °F | °C | Temperature |
| $T_{amb}$ | °F | °C | Ambient temperature |
| $T_{max}$ | °F | °C | Maximum temperature |
| $T_{min}$ | °F | °C | Minimum temperature |
| U | fpm | m/s | Sliding speed |
| $U_{lim}$ | fpm | m/s | Maximum sliding speed |
| µ | - | - | Coefficient of friction |
| $\alpha_1$ | $1/10^6$K | $1/10^6$K | Coefficient of linear thermal expansion |
| σ | psi | N/mm² | Compressive yield strength |
| φ | ° | ° | Angular displacement |

| Unit Conversions | |
|---|---|
| **METRIC to IMPERIAL Conversions** | |
| 1 mm | 0.0394 inch |
| 1 m | 3.2808 ft |
| 1 Newton = 1N | 0.225 lbs. |
| 1 MPa = 1 N/mm² | 145 psi |
| 1 m/s | 196.85 fpm |
| °C | (°F-32)/1.8 |
| **IMPERIAL to METRIC Conversions** | |
| 1 inch | 25.4 mm |
| 1 ft | 0.3048 m |
| 1 Lb. | 4.448 N |
| 1 psi | 0.0069 MPa = 0.0069 N/mm² |
| 1 fpm | 0.0051 m/s |
| °F | (1.8 x °C) +32 |

| |
|---|
| mm = millimeters |
| m = meters |
| ft = foot |
| in = inch |
| N = Newtons |
| W = Watts |
| MPa = MegaPascal = $10^6$ Pa |
| Lbs. = pounds |
| psi = pounds per square inch |
| hr = hour |
| ft/min = feet per minute |
| m/s = meters per second |
| °F = degrees Fahrenheit |
| °C = degrees Celsius |
| K = degrees Kelvin |
| BTU = British Thermal Units |

# 8.7 Other GGB Bearing Products

Whatever your application requires, GGB offers the solution with its wide range of bearing products:

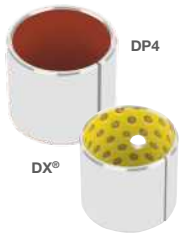


**Metal Polymer**
https://www.ggbearings.com/en/products/metal-polymer
We manufacture metal-backed, PTFE-based and thermoplastic metal-polymer bearings that share a common structure consisting of a porous bronze sinter bonded into a metal backing. This bronze sinter layer is impregnated and overlaid with the filled PTFE or thermoplastic extruded tape liner.

The metal backing provides mechanical strength, while the bronze sinter layer provides a strong mechanical bond between the backing and the antifriction bearing lining. This construction promotes dimensional stability, improves thermal conductivity and offers exceptionally low friction. These materials are generally for use in marginally lubricated applications.

**Engineered Plastics**
https://www.ggbearings.com/en/products/solid-polymer-plastic-bearings
Our injection-molded engineered plastics provide excellent wear resistance and low friction in both dry and lubricated operating conditions over a wide range of applications. The EP™ Series of engineered plastics exhibits excellent dimensional stability, low coefficients of friction and thermal expansion, high compressive strength and creep resistance and good thermal conductivity.

We also manufacture acetal-based KA Glacetal thrust washers for light-duty applications, Multilube bearings that contain lubricants dispersed in the material and FLASH-CLICK® bearings for simply manual or automated installation without a pilot or assembly tools.

**Bushing Blocks and Thrust Plates**
https://www.ggbearings.com/en/products/bushing-blocks-and-thrust-plates
GGB's high precision bushing blocks and thrust plates are made from our proprietary aluminum alloys and provide good friction and wear resistance. They can be supplied with or without pre-installed GGB metal-polymer cylindrical bearings.

**Metal and Bimetal Bearings**
https://www.ggbearings.com/en/products/metals-bimetals-bearings
We have a broad range of monometallic, bimetallic and sintered bronze bearings including our GGB-DB™ bearings, which are ideal for industrial applications on both land and underwater. Our range of impregnated solid bronze bearings is intended for use in maintenance-free operations, under moderately high speeds and low loads. Designed for lubricated conditions, our mono- and bimetallic bearings are suitable for use in a wide range of operating conditions.

**Assemblies**
https://www.ggbearings.com/en/products/bearing-housing-assemblies
We ofer a variety of specialized housings and assemblies to complement our complete line of plain bearing solutions. UNI, MINI and EXALIGN™ self-aligning bearing housings are designed to be used with our range of metal-polymer bearings.

# 8.8 Product Information

GGB gives an assurance that the products described in this document have no manufacturing errors or material deficiencies.

The details set out in this document are registered to assist in assessing the material's suitability for the intended use. They have been developed from our own investigations as well as from generally accessible publications. They do not represent any assurance for the properties themselves.

Unless expressly declared in writing, GGB gives no warranty that the products described are suited to any particular purpose or specific operating circumstances. GGB accepts no liability for any losses, damages or costs however they may arise through direct or indirect use of these products.

GGB's sales and delivery terms and conditions, included as an integral part of quotations, stock and price lists, apply absolutely to all business conducted by GGB. Copies can be made available on request.

Products are subject to continual development. GGB retains the right to make specification amendments or improvements to the technical data without prior announcement.

Edition 2018 (This edition replaces earlier editions which hereby lose their validity).

## Statement Regarding Lead Content in GGB Products & EU Directive Compliance

GGB is committed to adhering to all U.S., European and international standards and regulations with regard to lead content. We have established internal processes that monitor any changes to existing standards and regulations, and we work collaboratively with customers and distributors to ensure that all requirements are strictly followed. This includes RoHS and REACH guidelines.

GGB makes it a top priority to operate in an environmentally conscious and safe manner. We follow numerous industry best practices, and are committed to meeting or exceeding a variety of internationally recognized standards for emissions control and workplace safety.

Each of our global locations has management systems in place that adhere to ISO TS 16949, ISO 9001, ISO 14001, ISO 50001 and OHSAS 18001 quality regulations.

All of our certificates can be found here: https://www.ggbearings.com/en/company/certificates.
A detailed explanation of our commitment to REACH and RoHS directives can be found at https://www.ggbearings.com/en/company/quality-and-environment.

Visit us on the internet:
https://www.ggbearings.com/en

© 2018 GGB. All rights reserved.

GGB®, GAR-MAX®, GAR-FIL®, HSG, MLG, HPM, HPMB®, HPF®, Multifil *and* SBC
*are registered trademarks or trademarks, as the case may be, of GGB and its affiliates.*

# 9.0 Your Notes

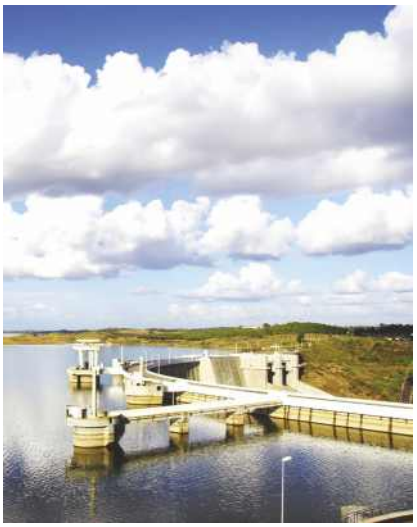

GGB

an Enpro Icompany

The Global Leader in High Performance Bearing Solutions


**GGB North America**

700 Mid Atlantic Parkway
Thorofare, New Jersey, 08086 USA
Tel. +1-856-848-3200
email: usa@ggbearings.com • https://www.ggbearings.com



HB300ENG01-18USA